SEEGER

MILITARY AIRLIFT COMMAND

C-141

AIRCRAFT SYSTEMS

Study Guide

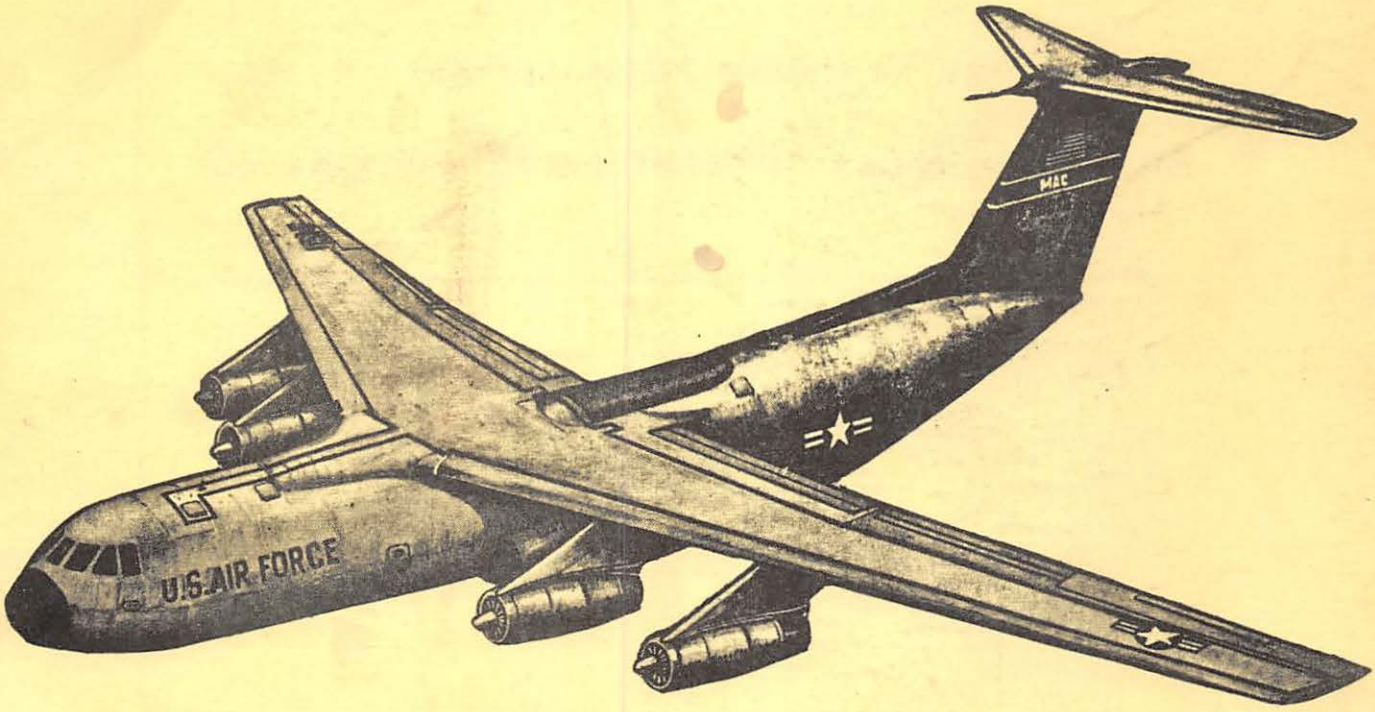

443d TECHNICAL TRAINING SQUADRON

443d MILITARY AIRLIFT WING TNG (MAC)

ALTUS AIR FORCE BASE, OKLAHOMA

STUDY GUIDE

C-141 AIRCRAFT SYSTEMS

This Study Guide is a supplemental reference which you may retain permanently. It will provide you with study material which will help you understand and assimilate our classroom instruction.

We have endeavored to omit all superfluous data and present you with a simple, condensed text of the aircraft systems, component units, and their operation. It will provide a valuable source of interesting and readable information, compiled expressly for you as a flight crew member.

NOTE

It must be understood that Technical Orders and other official directives supersedes this Study Guide when the information contained herein conflicts.

443d TECHNICAL TRAINING SQUADRON
443d MILITARY AIRLIFT WING, TNG (MAC)
ALTUS AIR FORCE BASE, OKLAHOMA

Air Force OC, 11 Jan 71-3M

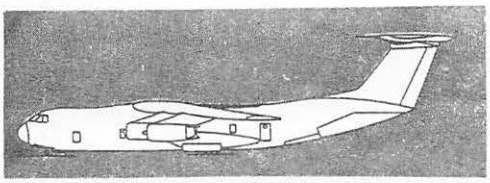

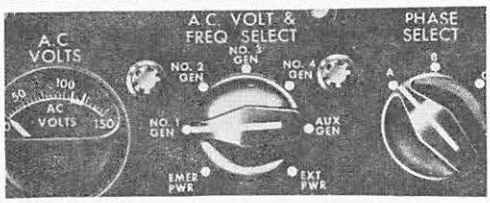

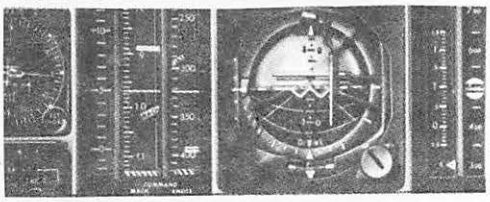

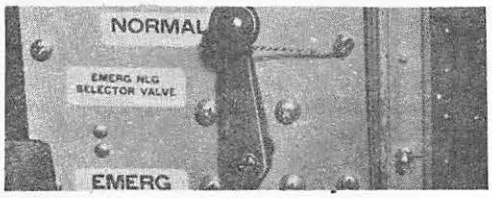

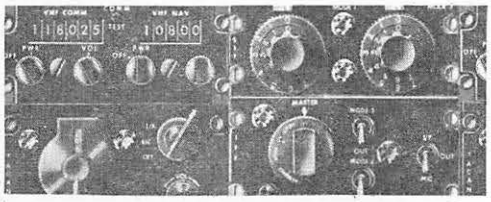

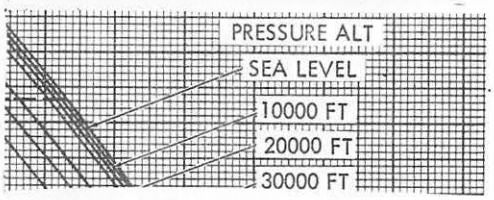

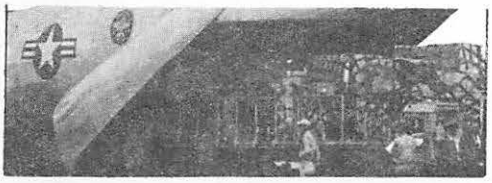

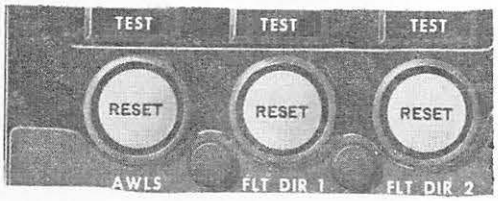

TABLE OF CONTENTS

C-141
AIRPLANE GENERAL

TABLE OF CONTENTS

Chapter 1

THE AIRCRAFT

General Description

The C-141 Starlifter is a long-range, high speed, high altitude, high swept-wing monoplane, designed for use as a heavy logistic transport. The designed gross weight of the aircraft is 325,000 pounds.

Cargo Compartment

The C-141's value as a strategic cargo transport lies in its design for straight-in aft loading. Also by design, the large unobstructed cargo compartment is built fully compatible with the Air Force 463L materials handling system.

AIRCRAFT DIMENSIONS

Span . . . . . 160 feet
Length (overall, including radome). . . . 145 feet
Stabilizer Span . . . . . 50 feet 4 inches
Tread Centerline of outboard main tires . . . . . 20 feet 2 inches

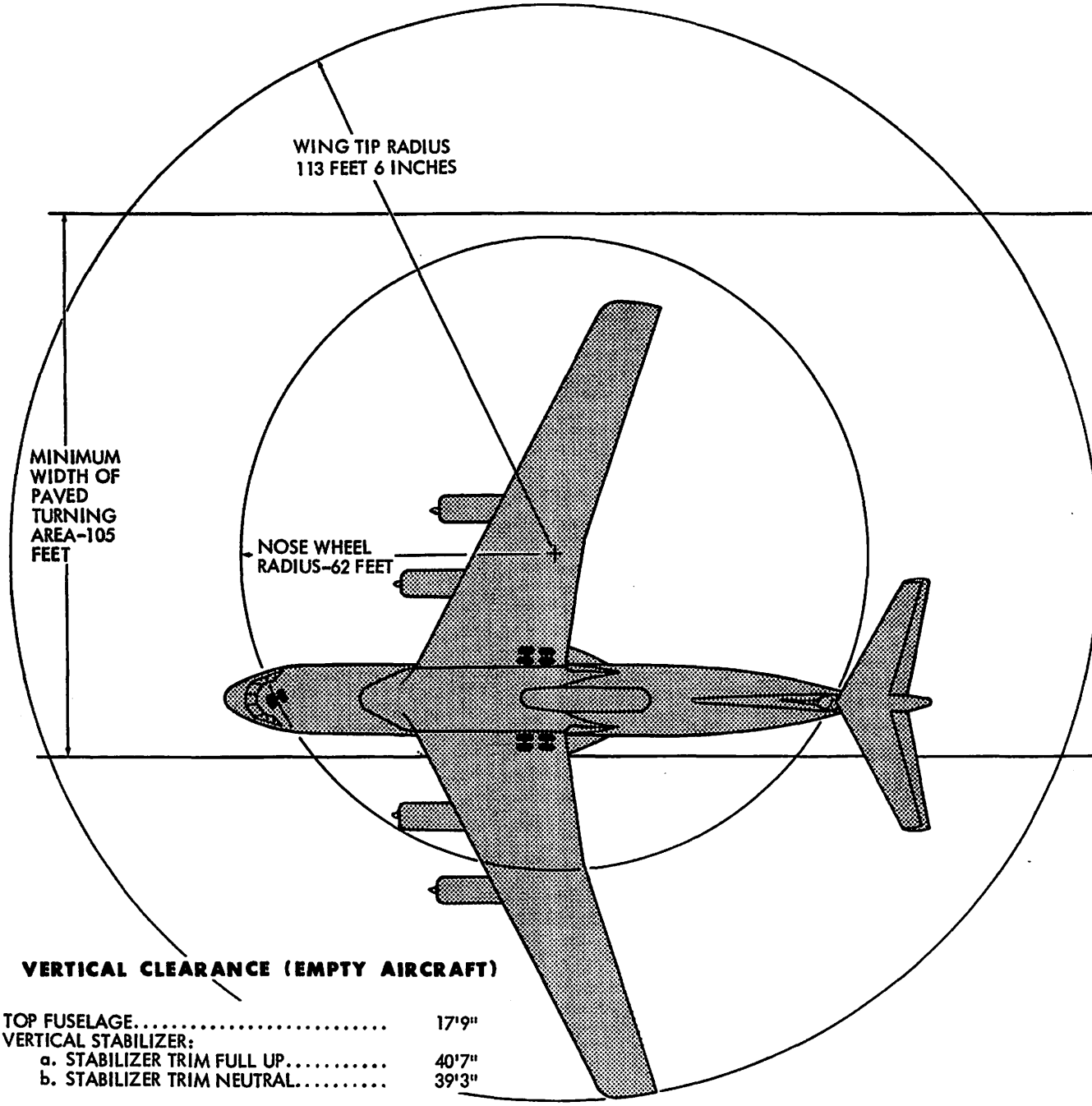

VERTICAL CLEARANCE (EMPTY AIRCRAFT)

TOP FUSELAGE	17'9"
VERTICAL STABILIZER:	
a. STABILIZER TRIM FULL UP	40'7"
b. STABILIZER TRIM NEUTRAL	39'3"

Up to ten standard 463L pallets can be winched aboard in minutes. In alternate configurations, accomodations can be made for 154 troops, or 123 paratroops, or 80 litter patients with 24 additional seats for attendants or ambulatory patients.

Minimum Crew Requirements

The minimum flight crew to fly the aircraft under normal non-tactical conditions will consist of a pilot, copilot, and flight engineer. Additional crew members, including navigator, may be added at the discretion of the aircraft commander.

Crew and Cargo Access Doors

Normal entrance is gained through the forward crew door, located on the left forward end of the cargo compartment. However, the troop doors located aft of either side of the cargo compartment may also be used. The doors can be opened from inside or outside the aircraft.

Emergency Exits

Seven emergency escape exits are provided in the cargo compartment. Four of these are in the sides of the fuselage and three are in the top of the fuselage. In addition, one emergency exit is located in the top of the flight deck. The pilot's and copilot's clear vision windows may also be opened for emergency escape. Specific areas throughout the fuselage, marked CUT HERE on the interior and exterior, are for emergency exit or entry of the fuselage.

Master Caution Light System

The master CAUTION light system consists of a master CAUTION light with reset switch on the pilot's and copilot's instrument panels, and an annunciator panel of 50 caution lights for various system malfunctions.

Both master CAUTION lights go ON to call the pilot's and copilot's attention to the fact that an annunciator light is flashing. Both master CAUTION lights go OUT by depressing either master CAUTION light. The annunciator light remains ON steady until the fault has been cleared.

If another annunciator light comes ON, the master CAUTION lights again come ON and the reset procedure is repeated.

Takeoff Warning System

The takeoff warning system consists of a green TAKEOFF light located on the pilot's instrument panel. When this light is illuminated, it indicates all items wired into this system are set and that takeoff conditions have been satisfied.

The TAKEOFF light comes ON when:

a. Power is ON the Isolated AC Avionics Bus.

b. Power is ON the Isolated AC Bus.

c. Power is ON Main DC Bus Nr 1.

d. Power is ON Main DC Bus Nr 2.

e. Spoilers are CLOSED and LOCKED. Spoiler Select Switch to RTO. Spoiler Lever ARMED.

f. Thrust reversers are CLOSED and LOCKED.

g. Flaps are in TAKEOFF/APPROACH position.

h. Autopilot is OFF.

i. All doors in the door warning circuit are CLOSED.

DANGER AREAS

DISTANCE FROM EXHAUST-FEET	20	45	100	200	300
MAXIMUM THRUST VELOCITY-MPH	1,000	500	200	100	50
IDLE THRUST VELOCITY-MPH	135	40			

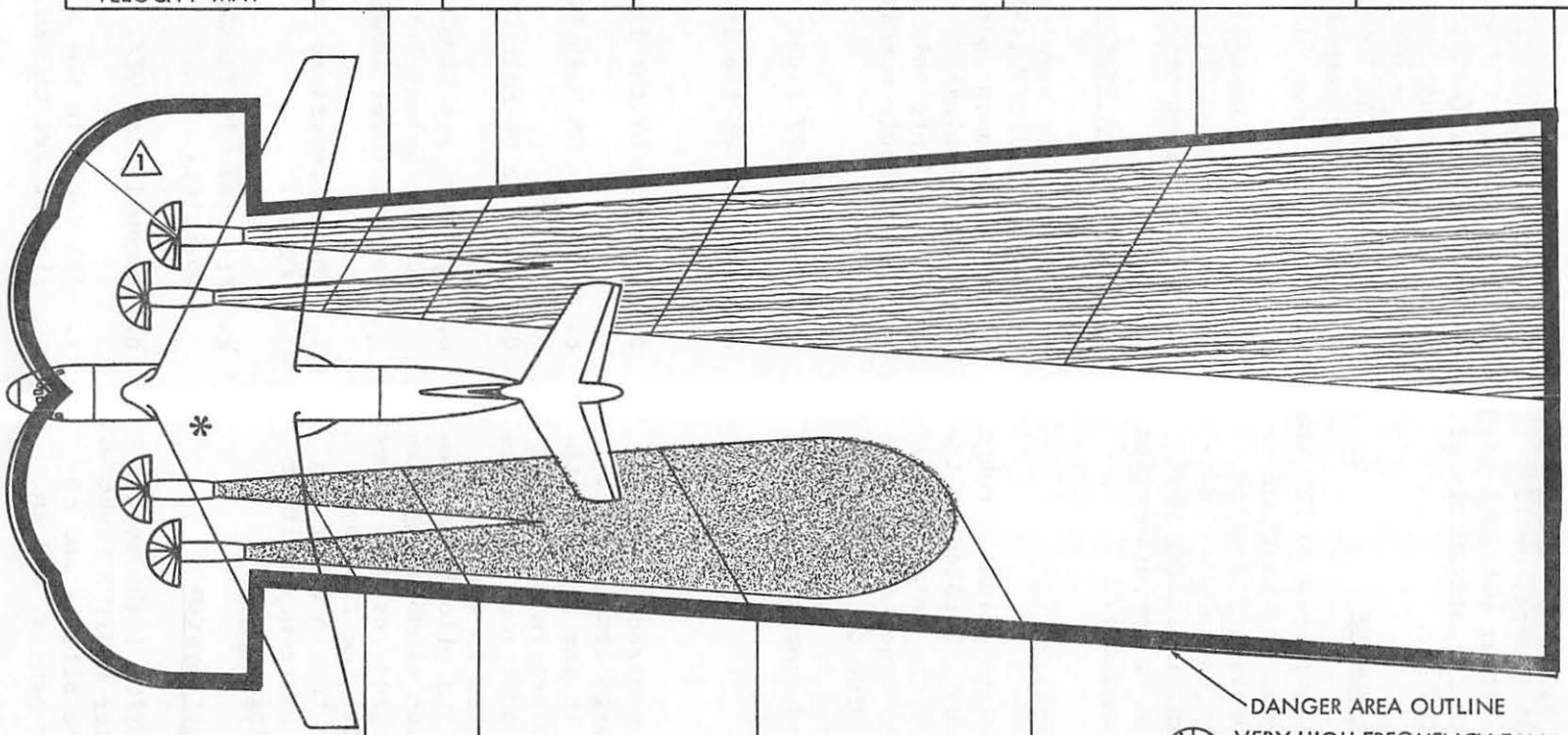

DISTANCE FROM EXHAUST-FEET	15	40	100	150
MAXIMUM THRUST TEMPERATURE-°F	920	400	200	150
IDLE THRUST TEMPERATURE-°F	420	195		

DANGER AREA OUTLINE

VERY HIGH FREQUENCY FAN NOISE, VIBRATION, AND INGESTION.

VELOCITY

TEMPERATURE

* APU EXHAUST DANGER AREA (ABOVE MAIN LANDING GEAR POD)

1 ENGINE INTAKE DANGER AREA - 25 FEET MINIMUM WITH ENGINES AT MAXIMUM THRUST.

EMERGENCY EXIT AND ENTRANCE

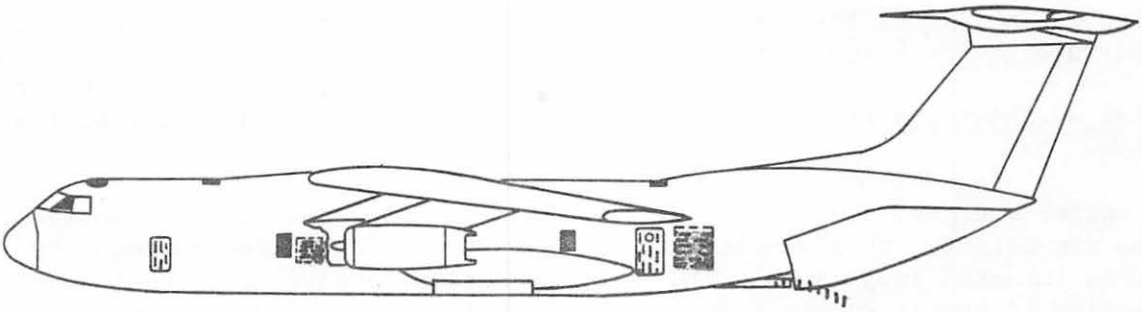

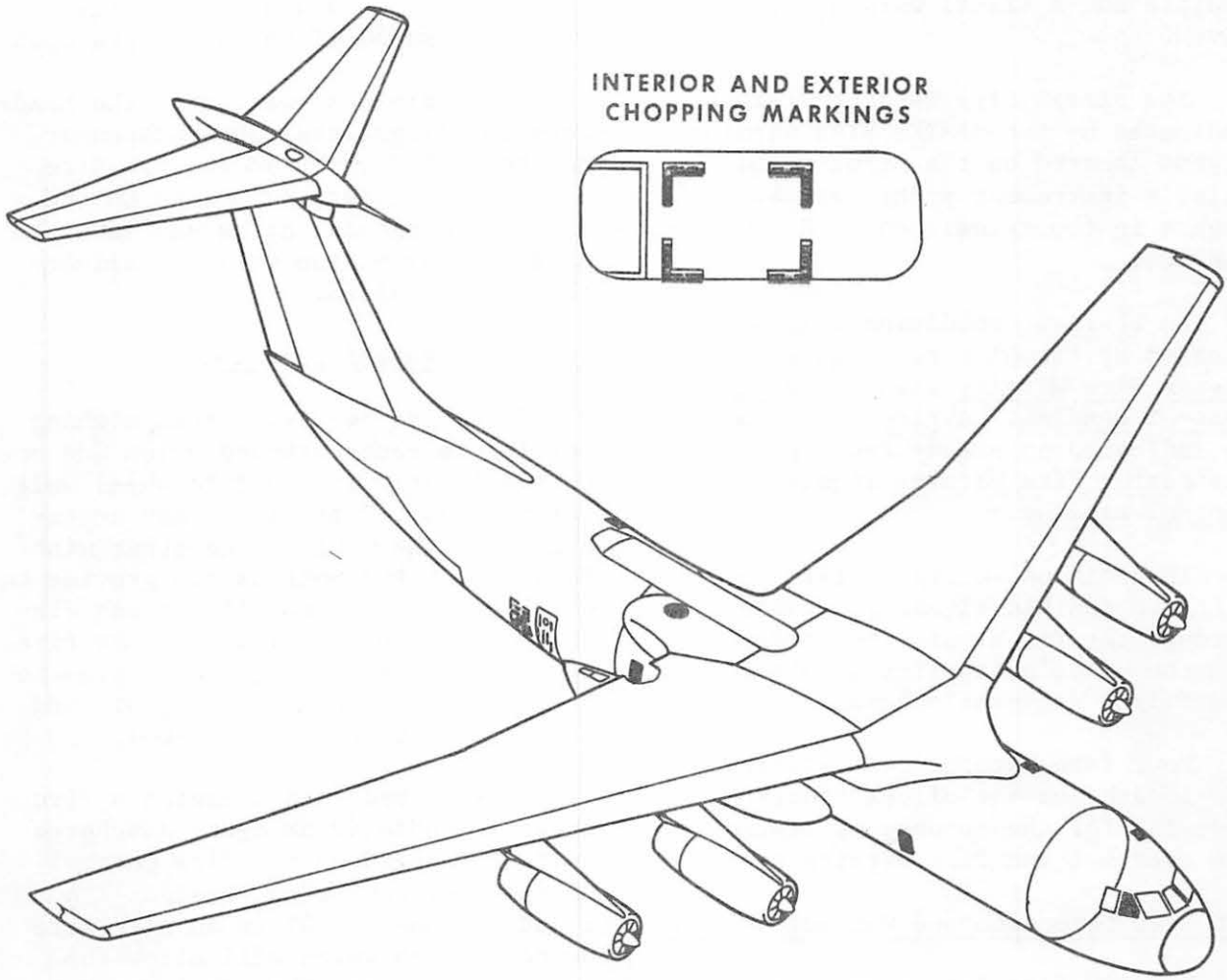

EXIT IN FLIGHT AND ON GROUND

EXIT ON GROUND ONLY

CHOPPING LOCATION

j. One button on either hydraulic pitch trim lever is DEPRESSED (this must be done last).

To prevent the TAKEOFF light from coming ON in flight, the system is wired into the Nr 9 touchdown relay.

Engine Overheat and Fire Detection System

Engine overheat and fire conditions are detected by a single, continuous inconnel loop capable of detecting either an overheat or fire condition in the engine compartment. Should a fire condition exist, an audible and a visual warning will be given.

The visual fire warning will be indicated by two MASTER FIRE warning lights located on the pilot's and copilot's instrument panels and by lights in the translucent FIRE CONTROL HANDLES.

An overheat condition will be indicated by flashing red lights in the Master Fire Warning lights and Fire Control Handles. A Fire condition will be indicated by steady red lights in the Master Fire Warning lights and Fire Control Handles.

In addition, during a fire condition, an audible signal is sounded through the flight station loudspeaker and the pilot's, copilot's, observer's, and flight engineer's headsets.

Four fire warning test switches are located on the pilots' control pedestal for the purpose of testing the overheat and fire warning system.

APU Fire Detection and Warning System

The APU fire detection system is the same type loop as used in the engine system, however, it will not indicate an overheat situation.

When actuated by a fire condition in the APU compartment, a visual warning will be displayed on the flight engineer's panel, the pilots' annunciator panel, and on the APU fire control panel located aft of the crew entry door.

At the same time, an audible warning will be sounded through the flight station loudspeaker, and the pilot's, copilot's, observer's, and flight engineer's headsets.

The bailout alarm at this time will also sound if any doors are open.

The audible signals from the headsets and flight station loudspeaker may be shut down by an audible fire alarm silence button located on the pilots' emergency engine shutdown panel. This button will not silence the bailout alarm.

Fire Extinguishing System

There are two fire extinguishing bottles in each outboard pylon and one bottle located in the left wheel well for the APU. There isn't any crossover from one wing to the other wing/ Each wing's two bottles can provide two discharges to one nacelle or one discharge to each nacelle. The APU fire bottle provides a single discharge to the APU compartment. The agent used is dibromodifluoromethane (DB).

Located under each engine's fire control handle is an agent discharge switch and between the fire control handles for each wing (Engines 1 & 2 and Engines 3 & 4) is an alternate select switch which will allow the selection of the other extinguishing bottle in the pylon of that wing to

be used for a second application of agent in one engine if necessary.

One type A-20 hand fire extinguisher is located in the flight compartment and three are located in the cargo compartment; one aft of the crew entrance door, one near the troop entrance door and the third midway on the right side of the cargo compartment.

Smoke Detection System

There are two smoke detection warning lights. One is located on the engineer's panel and one is on the annunciator panel. Any time the smoke detection warning lights are illuminated by the smoke detectors or the detector test switch located on the flight engineer's panel, the master CAUTION warning light will also come ON. There are five detectors; four are mounted in the cargo compartment and one is under the flight deck aft of the left avionics rack.

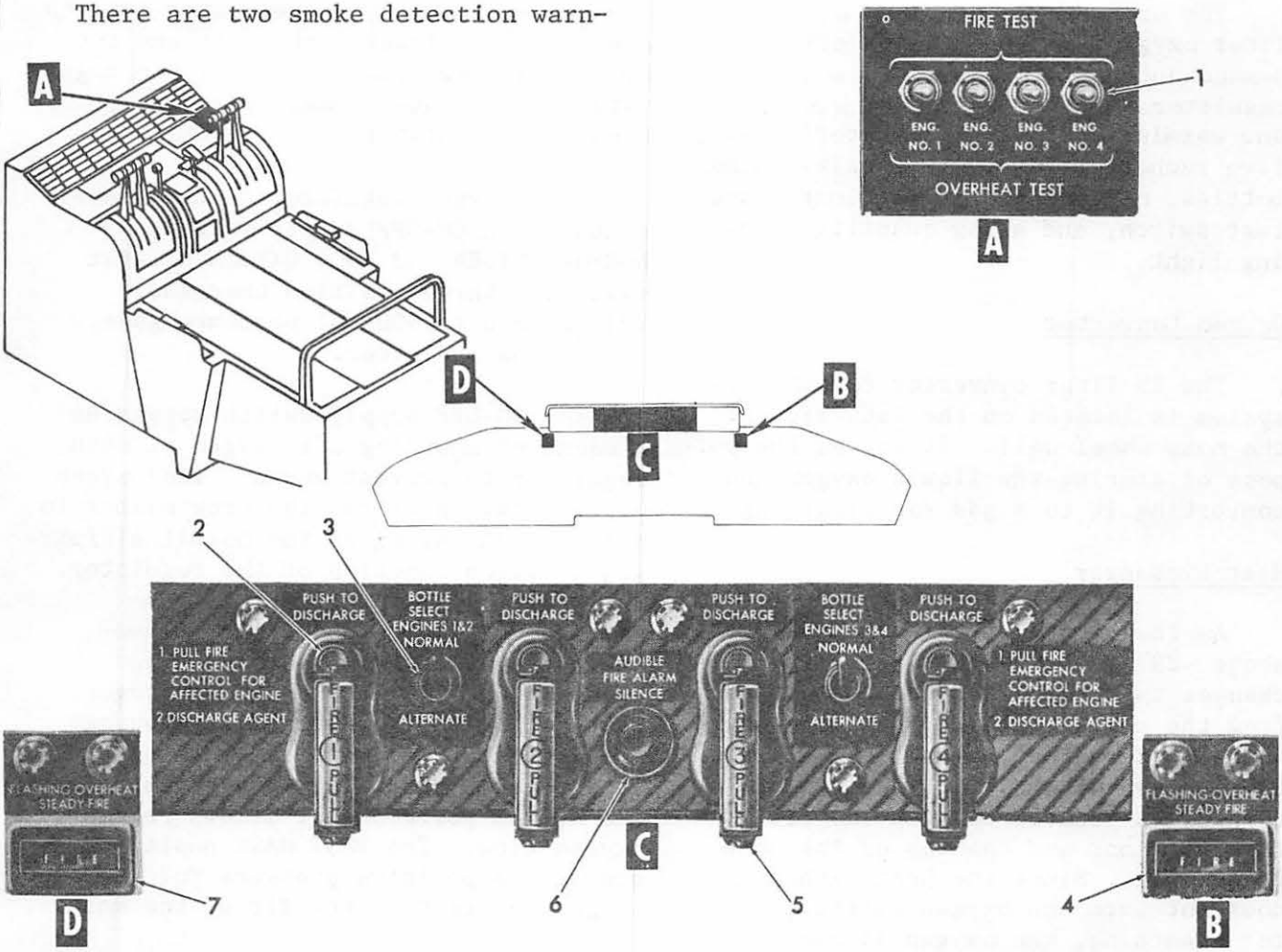

1. FIRE TEST & OVERHEAT TEST SWITCH
2. PUSH TO DISCHARGE BUTTON
3. NORMAL & ALTERNATE BOTTLE SELECT SWITCH
4. COPILOT'S OVERHEAT & FIRE WARNING LIGHT
5. ENGINE FIRE EMERGENCY CONTROL HANDLE
6. AUDIBLE FIRE ALARM SILENCE BUTTON
7. PILOT'S OVERHEAT & FIRE WARNING LIGHT

FIRE WARNING & EXTINGUISHING SYSTEM CONTROLS & INDICATORS

Chapter 2

OXYGEN SYSTEM

There are two independent 300 psi liquid oxygen systems in the C-141, a flight crew system and a troop system. These systems are not interconnected. Normal oxygen system pressure is 300 to 430 psi.

Crew System

The crew system consists of one 25 liter oxygen converter, nine diluter demand automatic pressure breathing regulators, filler box, heat exchanger and warming coil, manual shutoff valve, five recharger hoses, five walk-around bottles, oxygen quantity indicator and test switch, and a low quantity warning light.

Oxygen Converter

The 25 liter converter for the crew system is located on the left side of the nose wheel well. It serves the purpose of storing the liquid oxygen and converting it to a gas for breathing.

Heat Exchanger

As the oxygen warms to temperatures above -297°F in the converter, it changes to a gas. The gas is routed from the converter to a heat exchanger where it is warmed by compartment air flowing over the coils. The heat exchanger is located between the flight station floor and the top of the nose wheel well. Since the heat exchanger does not warm the oxygen sufficiently for breathing, the oxygen is routed through a warming coil located on the ceiling of the cargo compartment near the flight station. This warms the oxygen to breathing temperature.

Manual Shutoff Valve

The manual shutoff valve is in the nose wheel well near the converter. The control, a handwheel, is just aft of the pilot's side console. The purpose of the manual shutoff valve is to isolate the oxygen supply system from the distribution system in case of a cabin fire.

Crew Oxygen Regulators

There is an oxygen regulator at each crew station, lower bunk seats and the two extra crew seats. Crew oxygen regulators are diluter demand pressure breathing regulators.

Each oxygen regulator control panel contains an ON-OFF supply switch, a NORMAL OXYGEN and 100% OXYGEN diluter switch, a three position emergency switch, a 0 to 500 psi pressure gage, and a flow indicator.

The ON-OFF supply switch serves as a means of shutting off oxygen at each regulator to prevent waste. The oxygen diluter switch allows the crew member to select 100% oxygen or the normal air/oxygen dilution function of the regulator.

The purpose of the diluter lever is to prevent intermediate settings between 100% oxygen and normal oxygen. In the EMERGENCY position, it bypasses the regulator and supplies pure oxygen at a continuous positive pressure. In the NORMAL position, it allows regulated oxygen flow. The TEST MASK position provides a positive pressure for the purpose of testing the fit of the mask.

Troop System

The troop system is a removable continuous flow, liquid oxygen system operating from a supply pressure of 300 psi. The system operates through two regulators that automatically begin metering oxygen at 12,500 to 14,000 feet cabin altitude and shuts off oxygen flow when

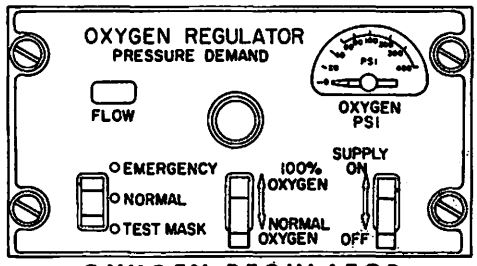

OXYGEN REGULATOR
(TYPICAL)

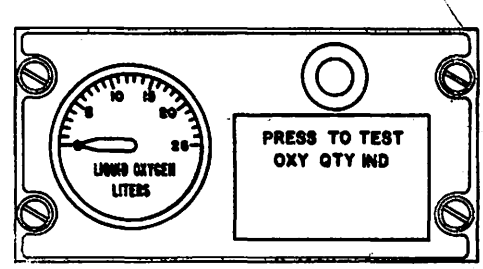

LIQUID OXYGEN QUANTITY
INDICATOR PANEL

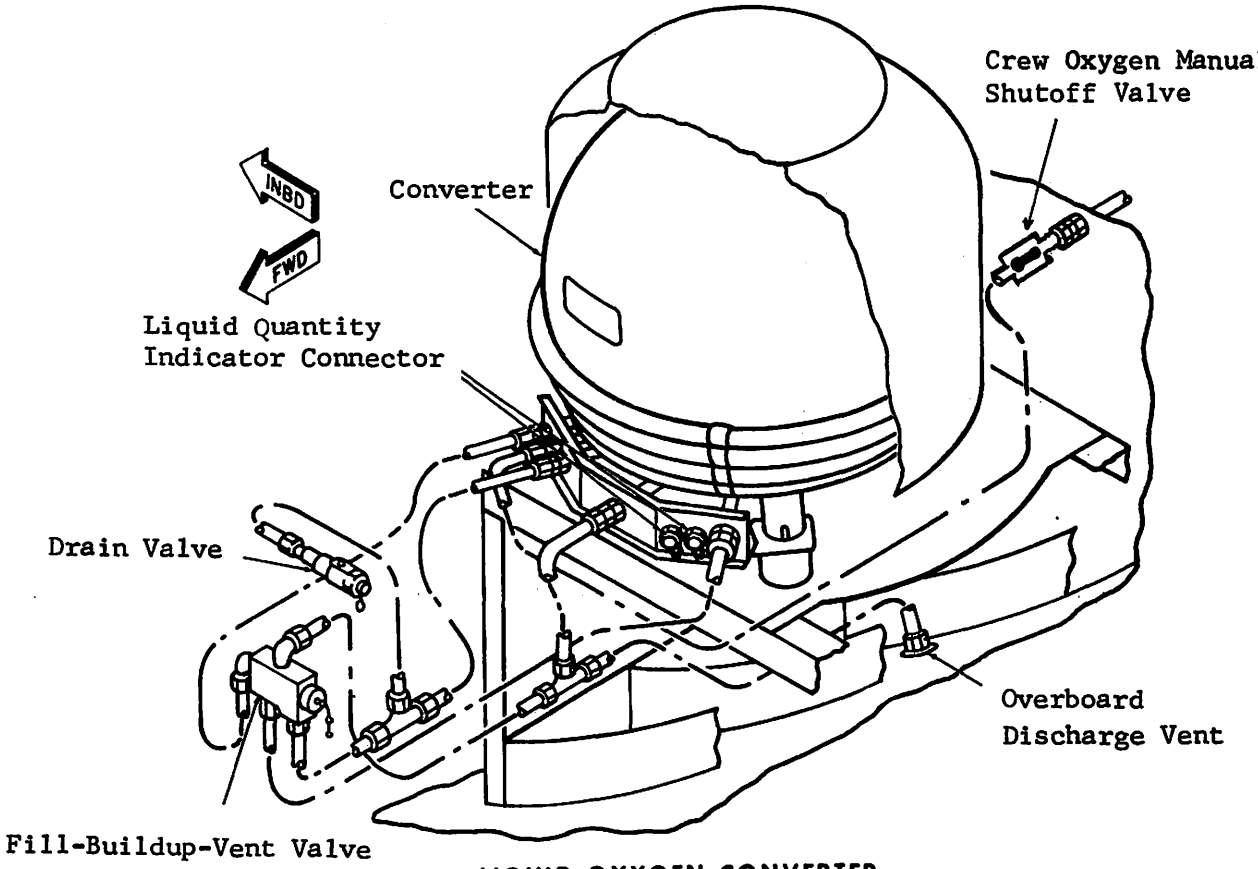

LIQUID OXYGEN CONVERTER

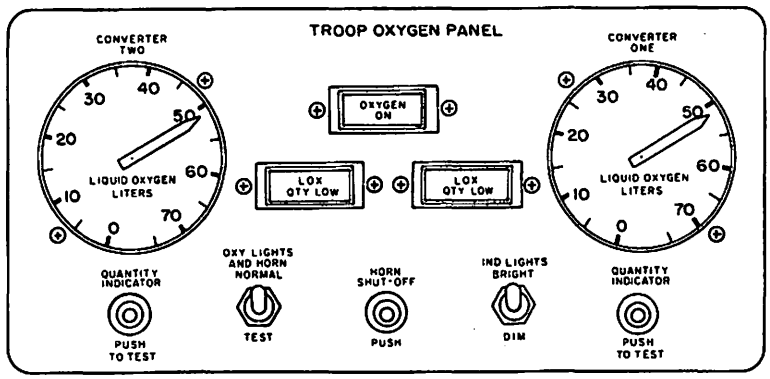

TROOP OXYGEN PANEL

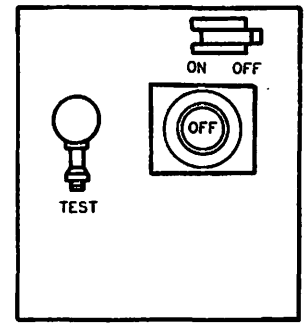

TROOP OXYGEN REGULATOR

cabin altitude drops below 11,500 feet. The system also has a manual override switch that will bypass automatic operation of the regulators and supply oxygen at any cabin altitude. The troop system consists of a removable liquid oxygen supply kit, permanently installed distribution system and a removable distribution kit.

Removable Liquid Oxygen Supply Kit

The removable supply kit consists of a converter pallet assembly and a regulator panel assembly.

The converter pallet assembly is installed in the forward section of the right main wheel pod. Located on the pallet are two 75 liter oxygen converters, two heat exchangers and two fill-buildup-vent boxes.

The two converters are connected in parallel. As the liquid oxygen changes to gas, it flows through its respective heat exchanger on the pallet to the troop oxygen regulator panel which is mounted inside the cargo compartment.

Regulator Panel

Essentially, the regulator panel consists of two continuous flow regulators, four heat exchangers, a pressure sensing switch, troop oxygen panel, and a therapeutic oxygen manual shutoff valve.

The two continuous flow regulators are connected parallel with the converters to allow both or either converters to supply oxygen automatically. The regulators are connected in parallel with each other. If one regulator fails the other will supply the maximum oxygen flow required. The regulators automatically begin oxygen flow at a cabin altitude of 12,500-14,000 feet and automatically close at 11,500 feet cabin altitude. There is a manual override switch on each regulator to allow the oxygen to be turned on at any cabin altitude. Each regulator also contains a pressure operated OXYGEN ON indicator that indicates the regulator has been turned on either manually or automatically.

The four heat exchangers mounted adjacent to the regulators use cabin air circulating around them to warm the oxygen to breathing temperature.

When oxygen starts to flow through either regulator, it will actuate the pressure sensing switch. When actuated, the pressure sensing switch will cause the warning horn to sound, the cargo compartment dome lights to come on BRIGHT, and the OXYGEN ON indicator light to come ON.

The troop oxygen panel is mounted on the lower right side of the regulator panel. The quantity indicators read quantity of liquid oxygen in the converters. The push to test button, when actuated will cause its respective quantity gage to rotate counterclockwise until it indicates 7.5 liters at which time the LOX QTY LOW light will come on. When the button is released, the gage will return to normal and the warning light will go out. The two position toggle switch decaled OXY LIGHTS AND HORN NORMAL and TEST, is used to test the oxygen indicator lights and warning horn. The horn shutoff button is used to silence the horn after it has indicated oxygen flow.

Troop oxygen masks are of a disposable plastic type.

The therapeutic oxygen manual shutoff valve provides a means of using oxygen from the troop system to supply a special oxygen system for litter patients.

Chapter 3

FUEL SYSTEM

Introduction

This is a ten tank, wet wing, integral manifold fuel system. The four main tanks, four auxiliary tanks, and two extended range tanks hold 153,352 usable pounds. It is capable of supplying any engine from any tank, transferring fuel from any tank to any other tank in flight or on the ground, single point refueling, and jettisoning.

Fuel Tank Vent System

There are two vent boxes located in each wing, an inboard vent box and outboard vent box. Both vent boxes are vented together but only the outboard vent box is vented overboard. The vent system is capable of handling the overflow of fuel if a refueling valve should fail during single point refueling.

Fuel Tank Construction

Main Tanks

Main tanks each contain a small compartment in the outboard section of the tank called a surge box. The surge boxes in Nr 1 and Nr 4 main tanks will hold 250 gallons each. The surge boxes in Nr 2 and Nr 3 main tanks hold 120 gallons each. The main tank surge boxes house the primary and secondary booster pumps, and assure a supply of fuel to the booster pumps during aircraft maneuvers. Whenever the quantity in the surge boxes drops below 50%, it will cause the SUMP LOW light on the fuel management panel to illuminate.

Auxiliary Tanks

Auxiliary tanks contain partial surge boxes and house the primary booster pump. The partial surge boxes serve the same function as the main tank surge boxes but do not actuate a SUMP LOW light.

Extended Range Tanks

Extended range tanks do not have surge boxes but do have bulkheads that divide the tanks into two compartments. The bulkheads have one way flapper valves on the bottom of the bulkhead to allow fuel to flow from the inboard to the outboard side to assure a supply of fuel to the two booster pumps located in the outboard section. The top of the bulkhead is also open to allow free passage of air and vapors in both directions for proper ventilation.

Booster Pumps

There are two booster pumps in each tank. The outboard pumps in the main and auxiliary tanks are called primary pumps and the inboard pumps are called secondary pumps. The pumps in the extended range tanks are called inboard and outboard pumps, and are in the outboard compartments of the tanks.

Main tank booster pumps are rated at 23,700 pounds per hour (pph) or 13-22 psi. Auxiliary and extended range tank booster pumps are rated at 17,000 pph or 30-45 psi. Each pumping element consists of a 115/200 volt, 3 phase AC motor and an impeller. The biggest difference between main tank pumps and auxiliary and extended range tank pumps is the design of the impeller.

Ejectors

There are ejectors installed in each tank. Their primary purpose is to scavenge fuel from low spots within the

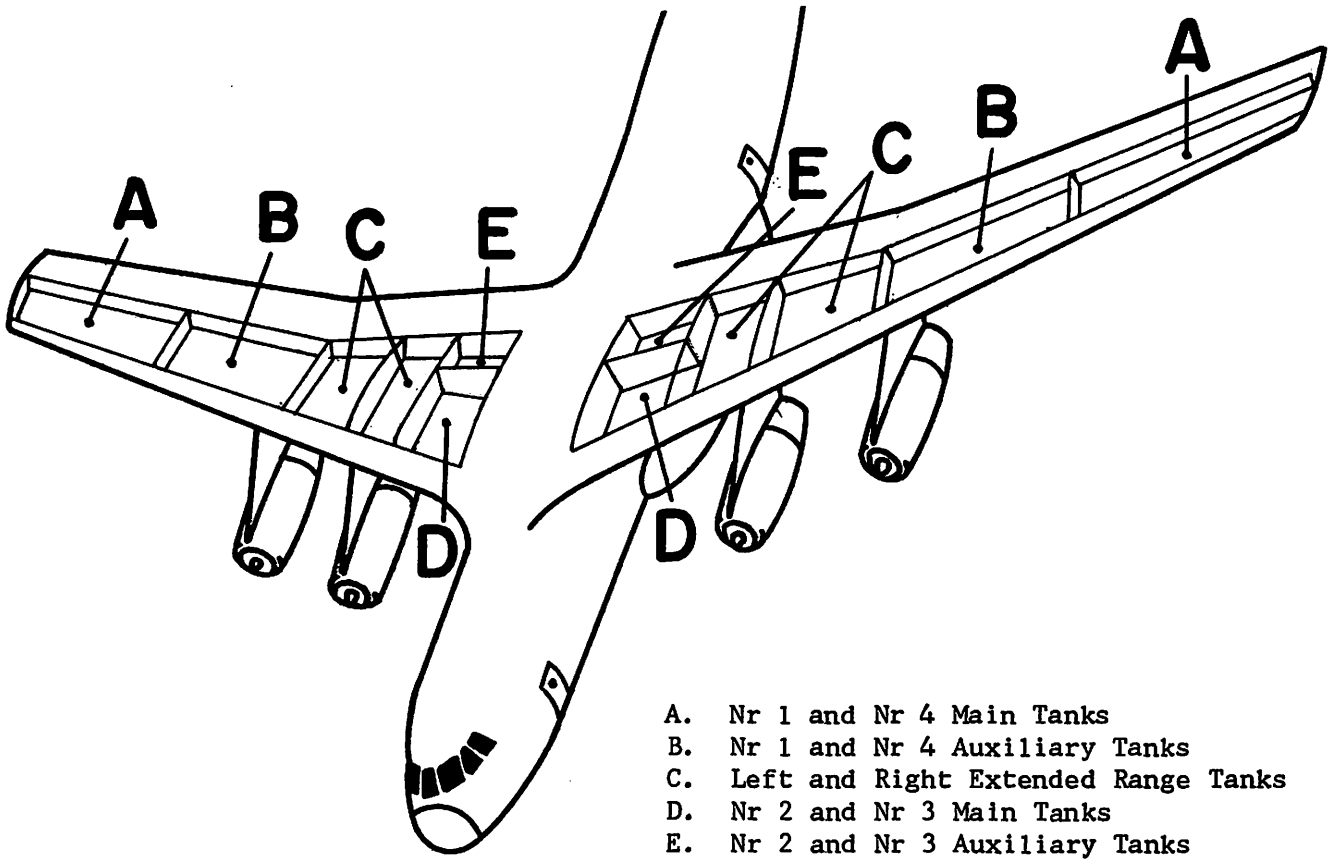

FUEL TANK ARRANGEMENT

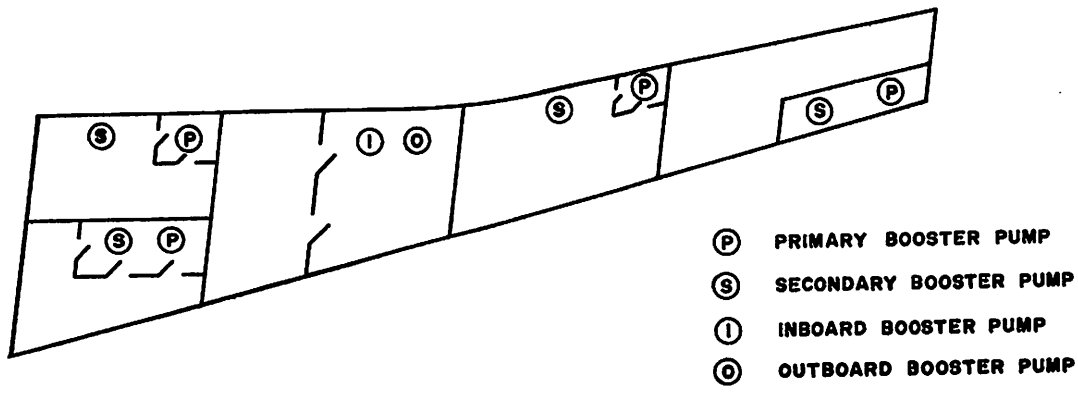

FUEL BOOSTER PUMPS AND SURGE BOXES

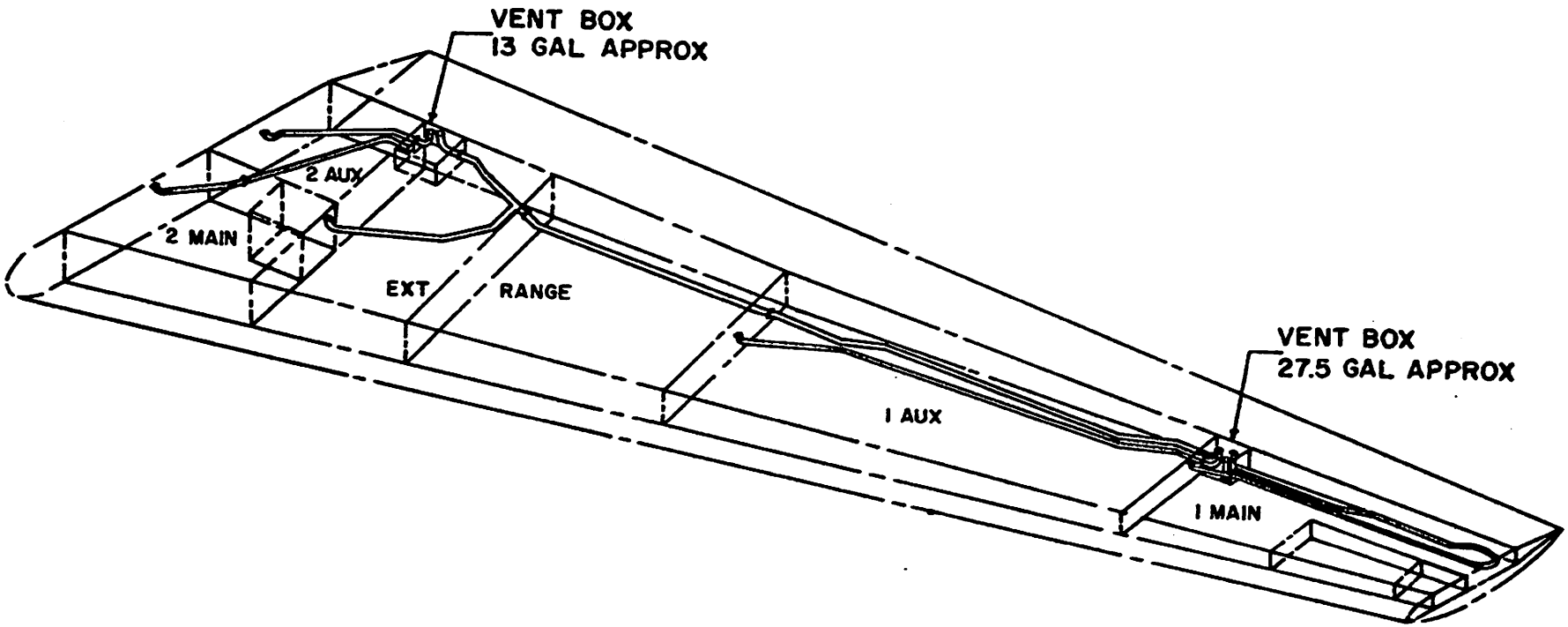

FUEL VENT SYSTEM

tank and return it to the surge boxes or to the outboard side of the bulkhead for the extended range tanks. Ejectors are jet pumps activated by fuel flow from the tank booster pumps. The primary booster pump in the auxiliary tanks activates ejectors and both booster pumps in the main and extended range tanks activate ejectors. One ejector in each main tank will also scavenge fuel from the fuel vent box and return it to its respective surge box.

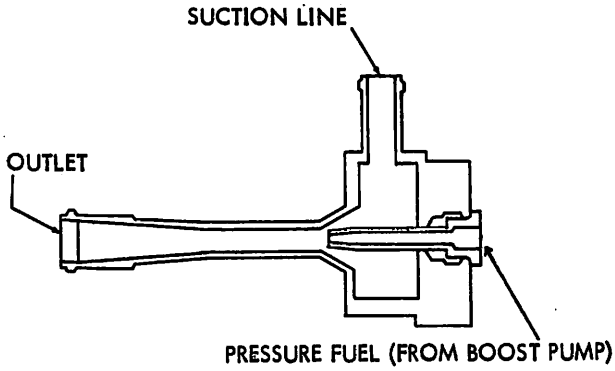

Typical Ejector

Control Valves

Crossfeed Valves

There are four crossfeed valves, one for each engine. They are DC motor driven valves powered from the Isolated DC Bus. They serve the functions of connecting the manifold to the engine and the main tanks to the manifold.

Separation Valves

There are three separation valves; left, center, and right. They are DC motor driven valves powered from the Isolated DC Bus. They divide the manifold into four sections. The center separation valve has a thermal relief feature but the left and right separation valves do not.

Manual Fire Shutoff Valves

There are four fire shutoff valves located on the front spar. They are mechanically controlled by a cable linkage to the fire control handles. They also provide thermal relief protection for the engine side of the valve when the valve is in the closed position.

Refueling Valves

Each tank contains one refuel valve, positioned near the top of the tank. The refuel valves govern the maximum level to which the tanks may be filled during single point refueling. Each valve automatically shuts off fuel flow to its tank when the preset maximum level is reached or it may be manually controlled by a switch to stop fuel flow at a lower level. Rate of fuel flow is governed by orifice plates located between the refuel valves and the lines feeding fuel to the tanks. Diameter of the center hole in the orifice plate determines the quantity of fuel per unit of time that may be fed to a given tank. Center hole diameters in the orifice plates are predetermined to allow all the tanks to reach full level at approximately the same time.

Jettison Valves

Two DC motor operated control valves connect the jettison lines to the wing fuel manifold. One is located in each wing. They are the left and right jettison valves. During the jettison operation the fuel in the left wing will be jettisoned out through the left jettison valve, and the fuel in the right wing will be jettisoned out through the right jettison valve.

Refueling Isolation Valve

The refueling isolation valve is located in the center wing section in

the refueling line between the refueling adapters and the wing fuel manifold. This valve is opened and closed by a switch marked REFUEL ISOL VALVE on the flight engineer's fuel management panel. This valve must be open during refueling and defueling operations.

SPR Drain Pump and Drain Valve

A 28 volt DC SPR drain pump in the right main gear pod can be energized to pump fuel from the single point refueling lines to the Nr 3 main tank. This pump operates in conjunction with an electrically actuated pump drain valve, and is controlled by the REFUELING MASTER switch on the flight engineer's fuel management panel.

Fuel Warning Lights

Sump Low Warning Lights

A SUMP LOW warning light over each main tank fuel quantity indicator goes ON to show that the fuel level in the corresponding main tank surge box is below the 50 percent level. These lights are controlled by thermistor type sensing elements attached to the tank units in the surge boxes.

Booster Pump Pressure Low Lights

There is a single PRESS LOW warning light located directly above the booster pump switches for each main tank. These PRESS LOW lights will illuminate when the booster pump switches are in the OFF position or when either or both switches are in the ON position and the fuel pressure drops below 4 psi. There are two PRESS LOW warning lights for each auxiliary tank and extended range tank located directly above their respective booster pump switches. These PRESS LOW lights will illuminate only when their respective booster pump switch is ON and the fuel pressure drops below 25 psi.

Fuel Jettison Stop Pump Lights

There are four jettison STOP PUMP warning lights located on the fuel management panel. These lights operate through the jettison switches, the outboard auxiliary tanks fuel quantity indicators, and the booster pump switches. During normal jettisoning, the STOP PUMP lights will illuminate when the quantity in the outboard auxiliary tank drops to 5500 pounds.

Fuel Feed System

Main Tank to Engine

The only valve between the main tanks and their respective engines is the manual fire shutoff valve which is controlled by the fire control handle and is normally open. Should the main tank booster pumps fail, the engines can suction feed from the main tanks through a by-pass valve in the main tank booster pumps only.

Auxiliary Tank to Engine

Fuel feed from the auxiliary tanks to their respective engine is from the tank booster pumps to the manifold and then from the manifold through a crossfeed valve to the engine.

Extended Range Tank to Engine

Normal fuel feed from the extended range tank to the outboard engine is from the outboard booster pump to the manifold and through the crossfeed valves to the engines.

Tank to Tank

Fuel may be transferred from tank to tank by pressurizing the manifold with the booster pumps in the tank being transferred from and opening the

FUEL PANEL

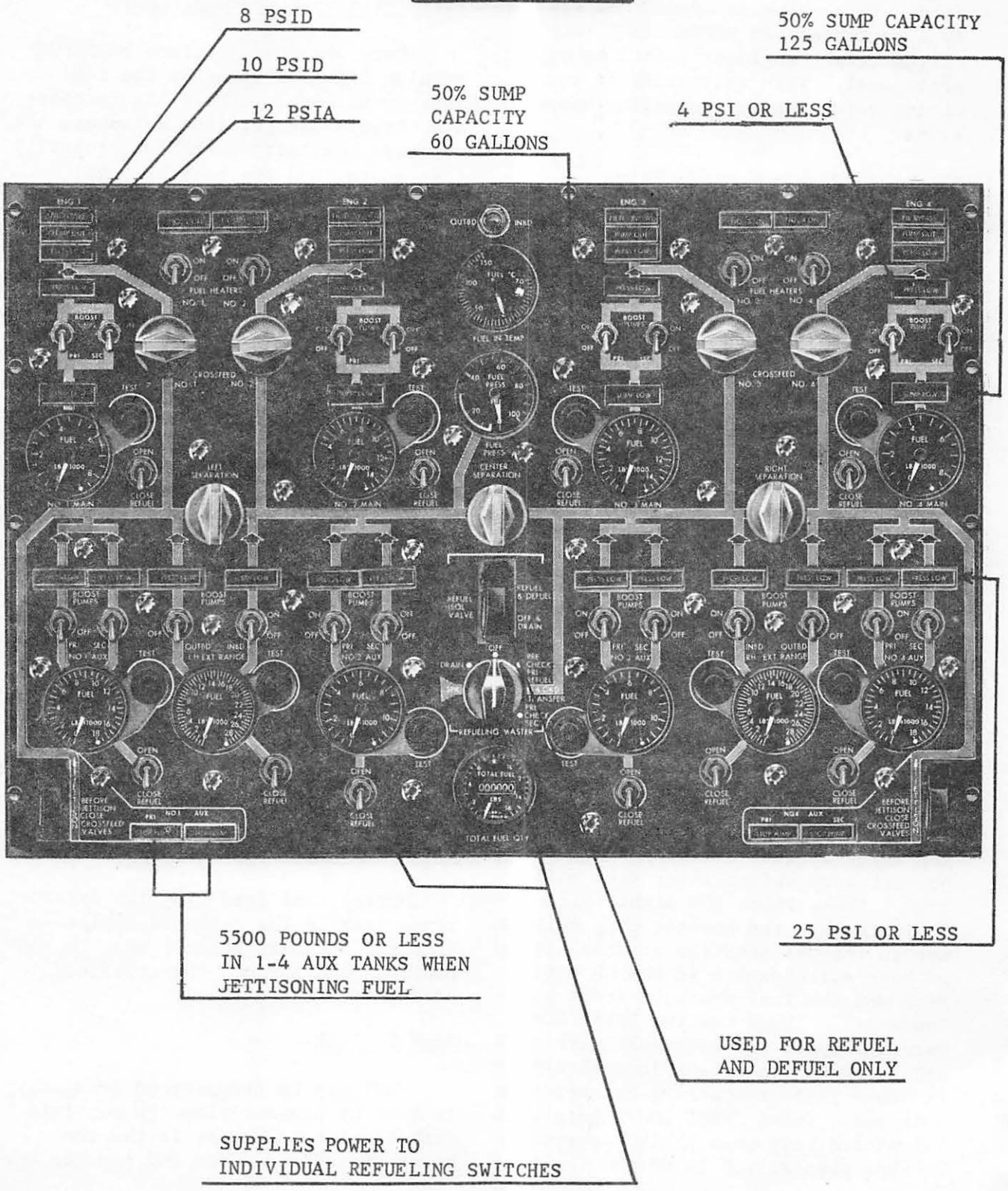
8 PSID
10 PSID
12 PSIA
50% SUMP CAPACITY 125 GALLONS
50% SUMP CAPACITY 60 GALLONS
4 PSI OR LESS
25 PSI OR LESS
5500 POUNDS OR LESS IN 1-4 AUX TANKS WHEN JETTISONING FUEL
USED FOR REFUEL AND DEFUEL ONLY
SUPPLIES POWER TO INDIVIDUAL REFUELING SWITCHES

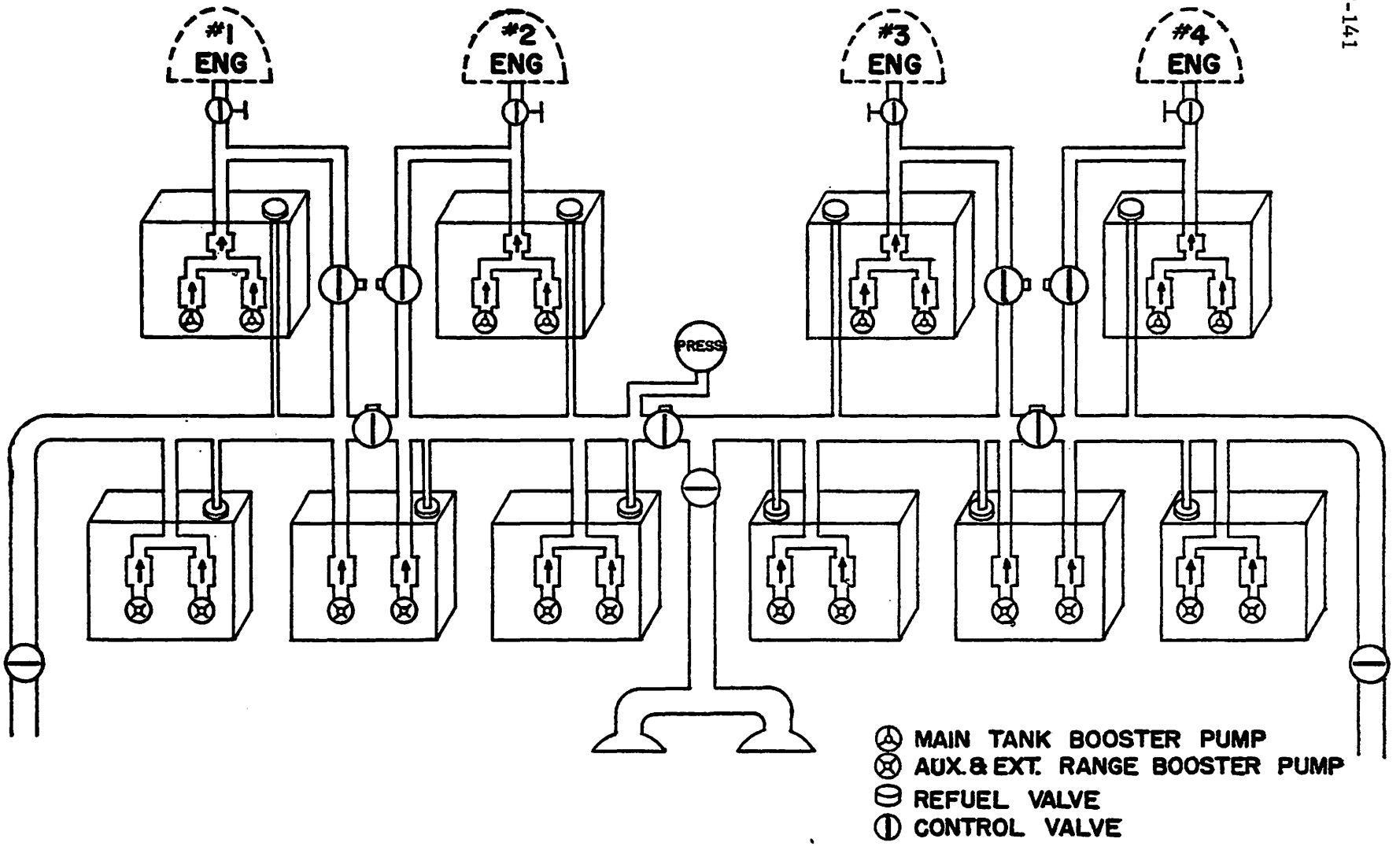

FUEL FEED SYSTEM

refueling valve for the tank receiving the fuel.

Fuel Pressure Indication

Fuel pressure indication is taken from the manifold between the left separation valve and center separation valve.

Refueling System

All refueling operations are normally accomplished through the single point refueling provisions. When facilities for single point refueling are not available, the tanks can be refueled through the filler openings in the upper wing surface.

Maximum Allowable Fuel Unbalance

The maximum allowable fuel unbalance between opposite pairs of tanks (other tanks remain balanced) is:

Extended Range Tanks	6,500 pounds
Outboard Aux. Tanks	4,030 pounds
Outboard Main Tanks	2,700 pounds
Inboard Main and Aux. Tanks	15,990 pounds

CAUTION

Fuel should be balanced before a landing is attempted. The unbalances shown above are the maximum unbalances, for each pair of tanks individually, that can be trimmed to 1.2 x V_s (landing configuration).

Chapter 4

ENVIRONMENTAL SYSTEMS

The environmental system is the most diversified system on the C-141, yet when divided into its sub-systems, it becomes relatively simple to understand. We will approach the systems in this order.

1. Bleed Air Manifold System
2. Cargo Floor Heat
3. Air Conditioning
4. Pressurization
5. Adverse Weather Systems

Bleed Air Manifold System

The purpose of the bleed air manifold system is to control and distribute the flow of bleed air used in the environmental and adverse weather subsystems. There are three sources of bleed air; the APU, ground cart or 16th stage engine air. The APU or ground cart supplies an airflow of approximately 126 pounds per minute at 40 psi and 230°C for ground operation of the air conditioning packs, floor heat and engine starting. Approximately 4.6% of the 16th stage air is tapped off each engine for use in air conditioning (cooling and heating), pressurization, floor heat, windshield rain removal, and wing anti-icing. At maximum power each engine will supply approximately 200 pounds per minute airflow at 220 psi and 420°C.

Bleed Air Manifold System Components

The systems consist of a 4 inch stainless steel cross-ship manifold, twelve check valves, four engine bleed valves, one wing isolation valve, one floor heat shutoff valve, two system shutoff and regulating valves, two pressure relief valves, and three pressure transmitters.

The cross-ship manifold is mounted in the leading edge of the wing and extends from outboard of Nr 1 engine pylon to outboard of Nr 4 engine pylon. It is insulated with a fiber glass blanket and wrapped with a fiber glass and resin cover. To compensate for thermal expansion and wing flexing, the manifold is coupled together with butt joints and compensators.

Engine Bleed Valves

There is one engine bleed valve located in each engine pylon for the purpose of isolating the engine from the manifold. They are 28 volt DC motor actuated butterfly valves. Power is supplied by the isolated DC bus and the circuit breakers are located on the flight engineer's Nr 3 circuit breaker panel. All four valves close when the air conditioning master switch is in the APU position. With the air conditioning master switch in any position other than APU, they may be opened or closed as selected by the engine bleed air switches located on the engineer's environmental panel. There is a CLOSED indicator light for each valve located above each switch.

Wing Isolation Valve

The wing isolation valve is located in the center wing fillet. Its purpose is to isolate the left and right wing. It, too, is a 28 volt DC motor driven butterfly valve, and receives power from the isolated DC bus. The circuit breaker is located on the flight engineer's Nr 3 circuit breaker panel. The wing isolation valve is open when the air conditioning master switch is in the APU or ENG START position. The wing isolation valve may be opened or closed as selected by the wing isolation switch when the air conditioning master switch is in any position other than APU or ENG START. In the NORMAL position of the switch, the valve is closed.

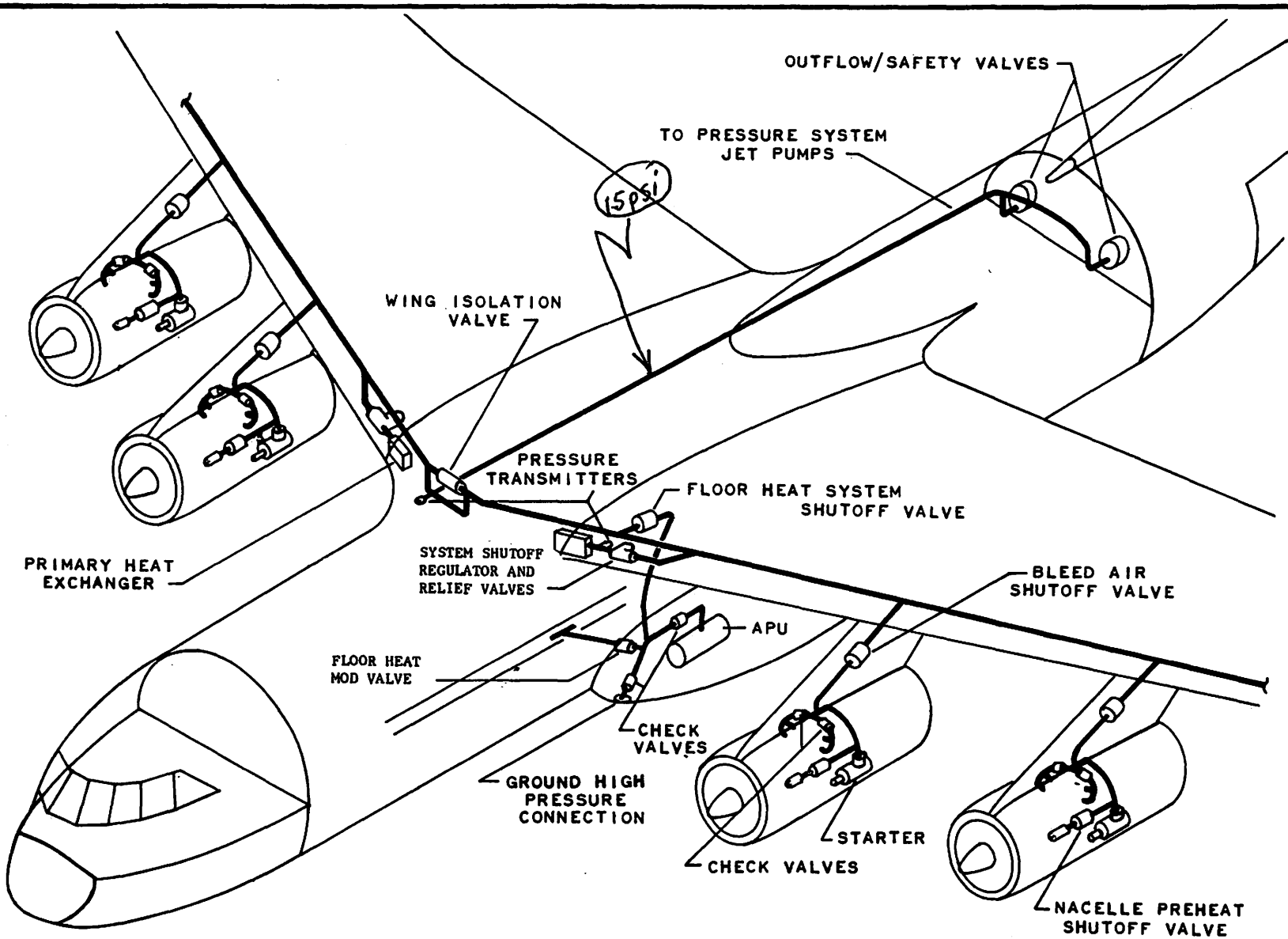

BLEED AIR SYSTEM COMPONENTS

ENVIRONMENTAL CONTROL PANEL

manifold bleed pressure guage

regulated air pressure guage

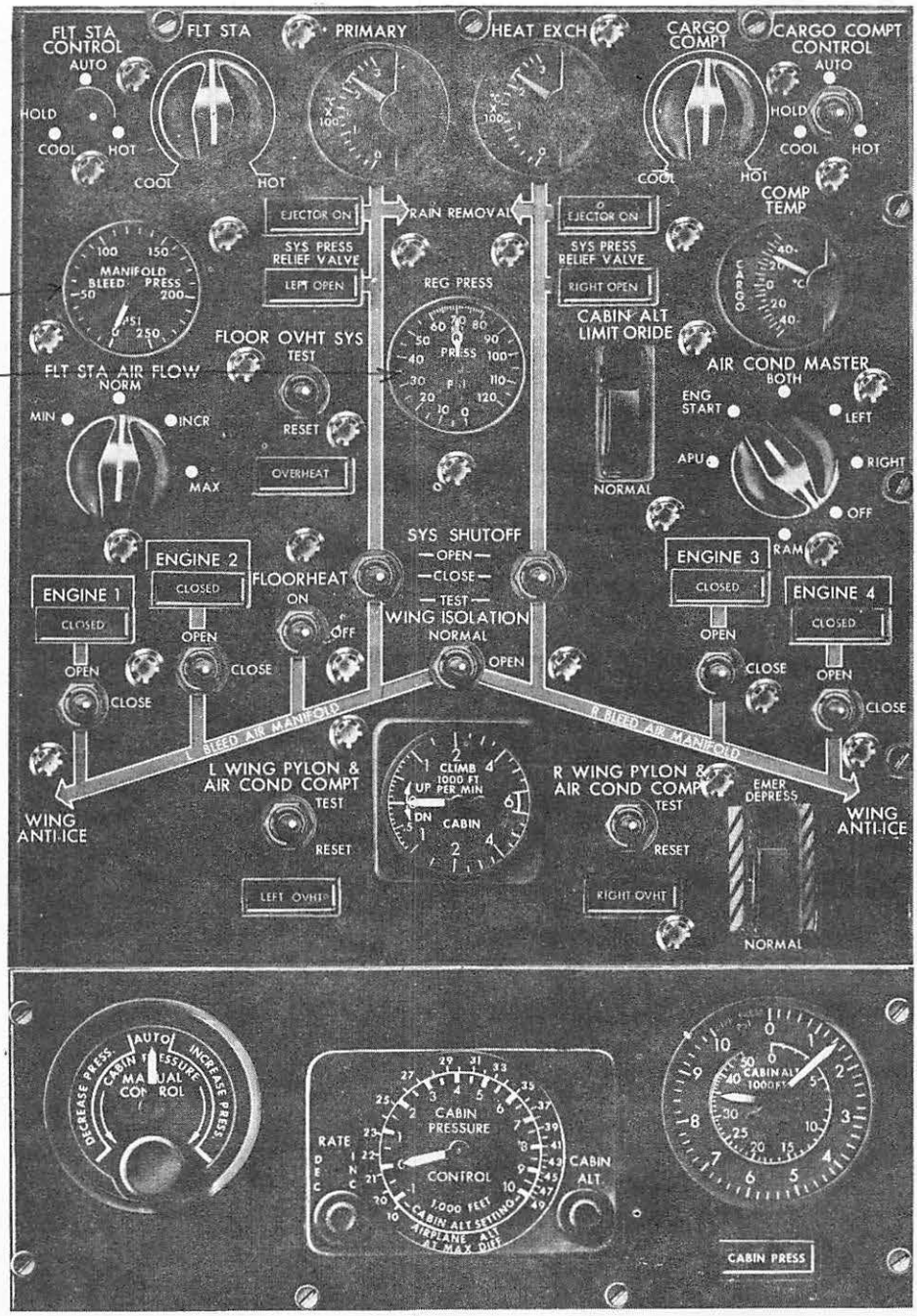

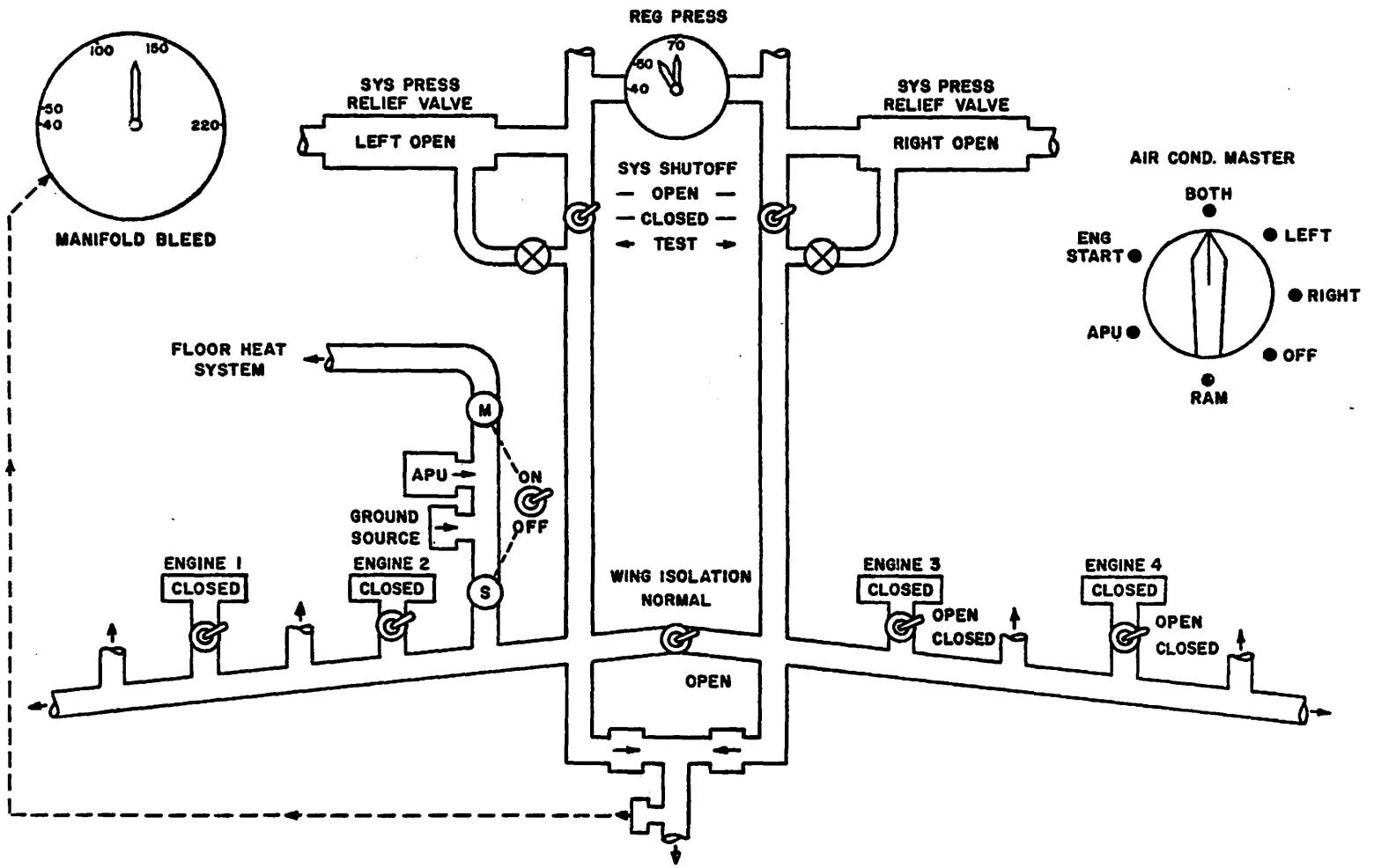

BLEED AIR SYSTEM SCHEMATIC

Floor Heat Shutoff Valve

Like the wing isolation valve and engine bleed valves, the floor heat shutoff valve is also a 28 volt DC motor driven butterfly valve receiving power from the isolated DC bus. It is protected by a circuit breaker on the flight engineer's Nr 3 circuit breaker panel. The purpose of the floor heat shutoff valve is to isolate the floor heat system, APU and ground cart bleed duct from the bleed manifold. It is opened automatically when the air conditioning master switch is in the APU or ENG START position and controlled either ON or OFF by the floor heat switch when the air conditioning master switch is in any position other than APU or ENG START.

System Shutoff and Regulating Valves

There are two system shutoff and regulating valves; one for each air conditioning pack. They are located in the center wing fillet and serve two purposes: one, to isolate their particular air conditioning pack from the bleed manifold; two, to regulate bleed air pressure going to the air conditioning packs to a maximum of 70 psi. The system shutoff and regulating valves are solenoid controlled and pneumatically actuated. The left valve receives power from the isolated DC bus and is protected by a circuit breaker on the flight engineer's Nr 3 circuit breaker panel. The right valve receives power from the main DC bus Nr 2 and its circuit breaker is on the engineer's Nr 4 circuit breaker panel. Both valves are closed when the air conditioning master switch is in the ENG START position and are opened or closed individually by the system shutoff switches in all other positions of the air conditioning master switch. Emergency pressurization switches, located on the emergency circuit breaker panel, will override the system shutoff and regulating valves to open. Both valves are spring loaded closed.

System Pressure Relief Valves

The left and right system pressure relief valves are located in the wing fillet adjacent to their respective system shutoff and regulating valves. They are solenoid controlled and pneumatically actuated. They are electrically powered simultaneously with the system shutoff and regulating valves and protected by the same circuit breakers. Their purpose is to regulate system pressure to a maximum of 90-115 psi in the event the system shutoff and regulating valves should fail.

Pressure Transmitters

One pressure transmitter is located in the wing fillet that senses bleed manifold pressure from both sides of the wing isolation valve. The highest pressure sensed is transmitted to a single manifold bleed pressure gage on the engineer's panel. There are two regulated air pressure transmitters located in the wing fillet; one for the left systems and one for the right systems. The pressure indication from these transmitters are read on the dual regulated air pressure gage located on the engineer's panel.

Bleed Manifold Overheat Warning

The overheat warning system consists of two identical Inconel loops. One loop is installed parallel to the bleed manifold ducting in the leading edge of the left wing, and along the ducting in the Nr 1 and Nr 2 engine pylon, and then along the left air conditioning packages. The second loop protects the right wing, Nr 3 and Nr 4 engine pylons and right air conditioning pack.

The purpose of the overheat warning system is to protect the leading edge of the wing, pylons and wing fillet from structural damage in the event the bleed air manifold should rupture.

It will illuminate the wing OVERHEAT light, annunciator light, and the master CAUTION warning light; close the two bleed air valves on the affected wing and close the wing isolation valve. A depressed starter button will override the automatic shutdown feature.

Leading Edge Blowout Doors

There are 44 external and 8 internal blowout doors in the leading edge of the wing to protect the wing leading edge from structural damage due to a ruptured bleed air duct. Four of the external doors are located on the upper surface of the wing leading edge above each pylon. They are set to operate at 9 psid. The 40 lower doors open at 4 to 6 psid depending on the door size.

The pressure differential on the doors reacts through a lever which shears a safety rivet allowing the door to open.

The eight internal doors are spring loaded closed and will open when the differential pressure reaches 4 psi.

Cargo Floor Heat System

The cargo floor heat system warms the cargo floor by circulating a mixture of bleed air and ambient air underneath the cargo floor. The system consists of two ejectors, supply and distribution ducting, a motor driven shutoff valve, pneumatic modulating valve, pneumatic temperature control thermostat, anticipator, and an overheat warning system.

For ground operation, air may be supplied by the APU, ground source, or by engine bleed air through the bleed air manifold. For flight operation, only engine bleed air is used.

Two ejectors are mounted on the end of the supply ducting as it enters a cavity in the distribution ducting. The purpose of the ejectors is to eject bleed air into the cavity creating a jet pump action, thereby causing under-floor ambient air to mix with bleed air for distribution under the cargo floor.

CARGO FLOOR HEAT

Supply ducting routes bleed air to the distribution duct. It runs from the floor heat shutoff valve in the left wing root, through the APU compartment, and under the cargo floor to the distribution ducting.

The distribution ducting runs along the longitudinal centerline on the underside of the cargo floor. The mixed air is discharged through outlets and flows laterally across the underside of the floor. The outlets are located at the center of 20 inch bays formed by the floor support bulkheads.

Cargo Floor Heat Shutoff Valve

The cargo floor heat shutoff valve is located in the left wing root. Its purpose is to isolate the floor heat system and the APU from the bleed manifold. It may be opened or closed by the floor heat switch located on the engineer's environmental panel when the air conditioning switch is in any position other than APU or ENG START. With the air conditioning master switch in APU or ENG START position the floor heat valve is open.

Cargo Floor Temperature Modulating Valve

This valve is solenoid controlled and pneumatically operated. The valve is located in the APU compartment and serves two purposes. One, it serves as a shutoff valve by isolating the floor heat system from all three air sources. Secondly, it regulates bleed air flow to the ejectors in response to the pneumatic thermostat. Electrical power is supplied by the main DC Bus Nr 1 through

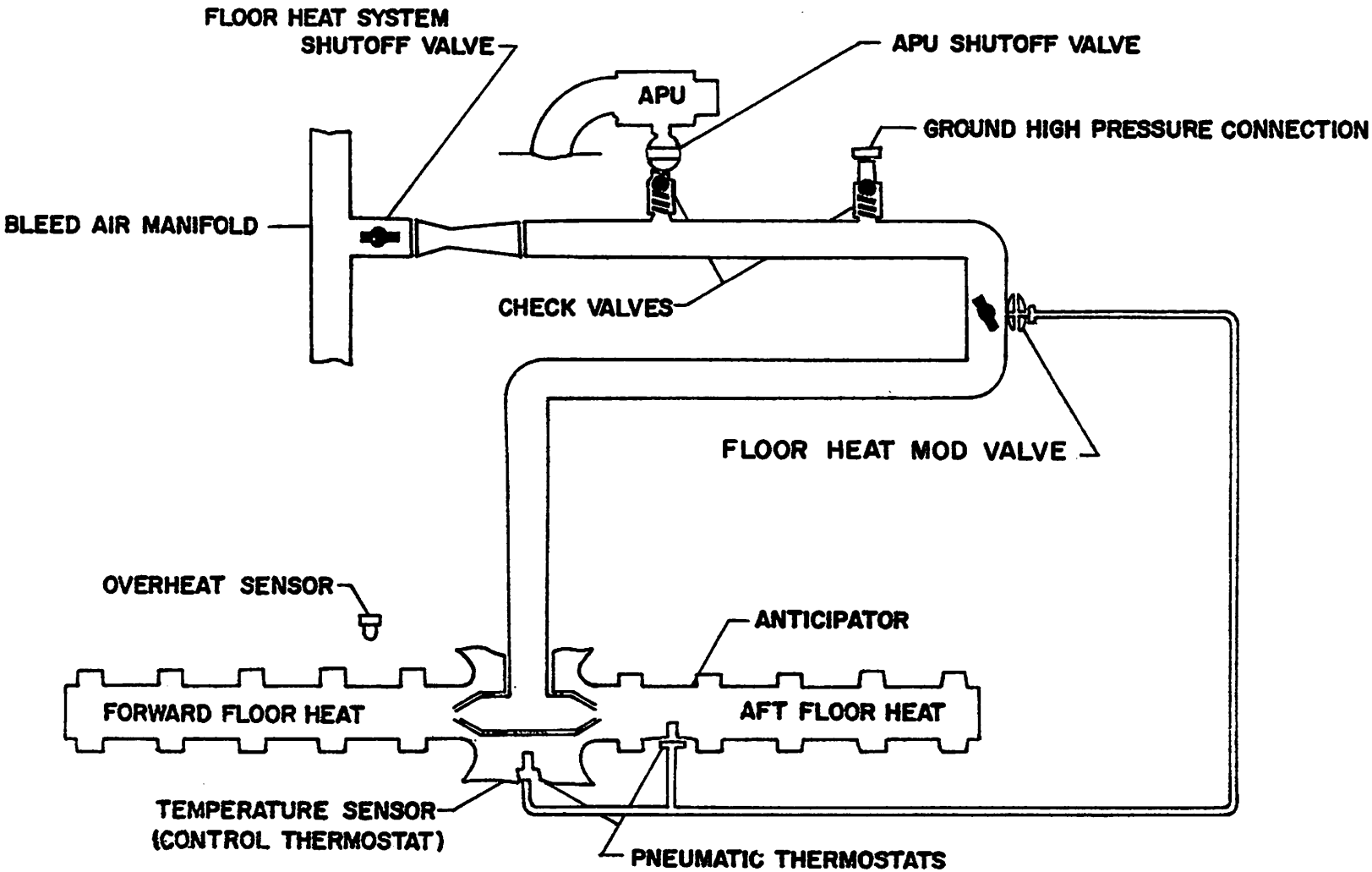

FLOOR HEAT SYSTEM SCHEMATIC

a circuit breaker on the flight engineer's Nr 4 circuit breaker panel. The valve is CLOSED when the air conditioning master switch is in ENG START. In all other positions the floor heat Mod valve is controlled by the floor heat switch located on the engineer's panel.

Pneumatic Temperature Control Thermostat

The temperature control thermostat is located in the distribution duct cavity. Its purpose is to sense recirculating air temperature and to send a pneumatic signal to the floor heat Mod valve causing it to regulate the bleed air flow to maintain a 65°F recirculating air temperature.

Pneumatic Anticipator

The anticipator is installed in the supply duct adjacent to the aft ejector. The purpose of the anticipator is to send pneumatic signals to the floor heat Mod valve in response to rapid temperature fluctuations. It remains non-active during steady state temperature conditions.

Cargo Floor Overheat Warning

Overheat warning is provided by two separate sensor systems. One sensor system is a continuous inconel loop sensor installed along the supply ducting. This system will detect a rupture of the supply ducting. It will actuate the CARGO FLOOR OVERHEAT WARNING light at 310°F. The second sensor is a thermal switch located in the distribution duct adjacent to the forward ejector. This sensor, set at 220°F, will detect overheat temperatures of the ejector caused by a failure of the cargo floor temperature modulating valve. If the overheat warning system is actuated by either overheat detection sensor system, the floor heat shutoff valve and floor heat temperature modulating valve will close and the FLOOR HEAT OVERHEAT light on the engineer's panel will illuminate. A depressed starter button will override the automatic shutdown feature.

Adverse Weather Systems

Wing Anti-Ice System

max use on ground is 30 sec.

The wing anti-ice system uses a mixture of bleed air and ambient air to heat the leading edge of the wing. The sections of the leading edge that are anti-iced are the "mid", "inneroutboard", and "outboard". The mid section is between the engine pylons; the inneroutboard is a section immediately outboard of the Nr 1 and Nr 4 pylons, the outboard section extends from the inneroutboard section to the wing tip.

Bleed air from the bleed air manifold is routed through a wing anti-ice "mod" valve to the "piccolo" tube, where it is injected into a small transfer chamber between the double skin area inside the leading edge of the wing. As the bleed air is injected into the transfer chamber it induces leading edge ambient air to mix with the bleed air and then flows through the double skin transfer passages to heat the wing leading edge. The air is exhausted overboard at the louvers in the wing tip for the outboard section and at slots in the pylons for the inneroutboard and mid sections.

Wing Anti-Ice "Mod" Valves

There are three wing anti-ice "mod" valves in each wing, one for each section. The purpose of the "mod" valves is to regulate the temperature and volume of air flowing to the piccolo tubes. The valves are solenoid controlled and pneumatically actuated. The outboard "mod" valve receives power from the main DC bus Nr 2. The circuit

Dash-1 read: 9-14 F
9-15
9-16
9-17
9-18

don't fly in known or forecast icing may have to ↑ airspeed or ↓ altitude to get total wing skin temp of 10°

1. ANTI-ICING MODULATING VALVE
2. TEMPERATURE CONTROL SENSOR
3. FRONT BEAM
4. THERMOSTAT
5. AIR EXIT
6. PICCOLO TUBE
7. NOZZLES
8. SUPPLY DUCT

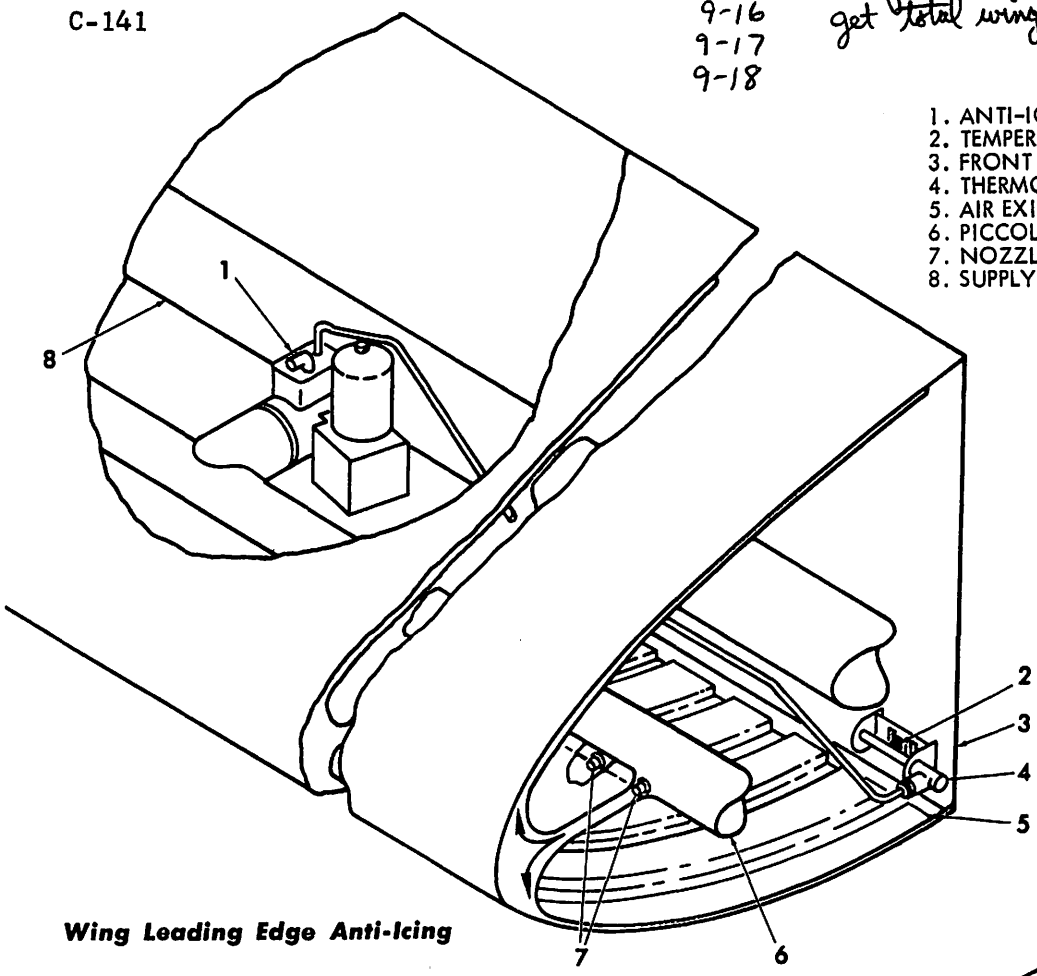

Wing Leading Edge Anti-Icing

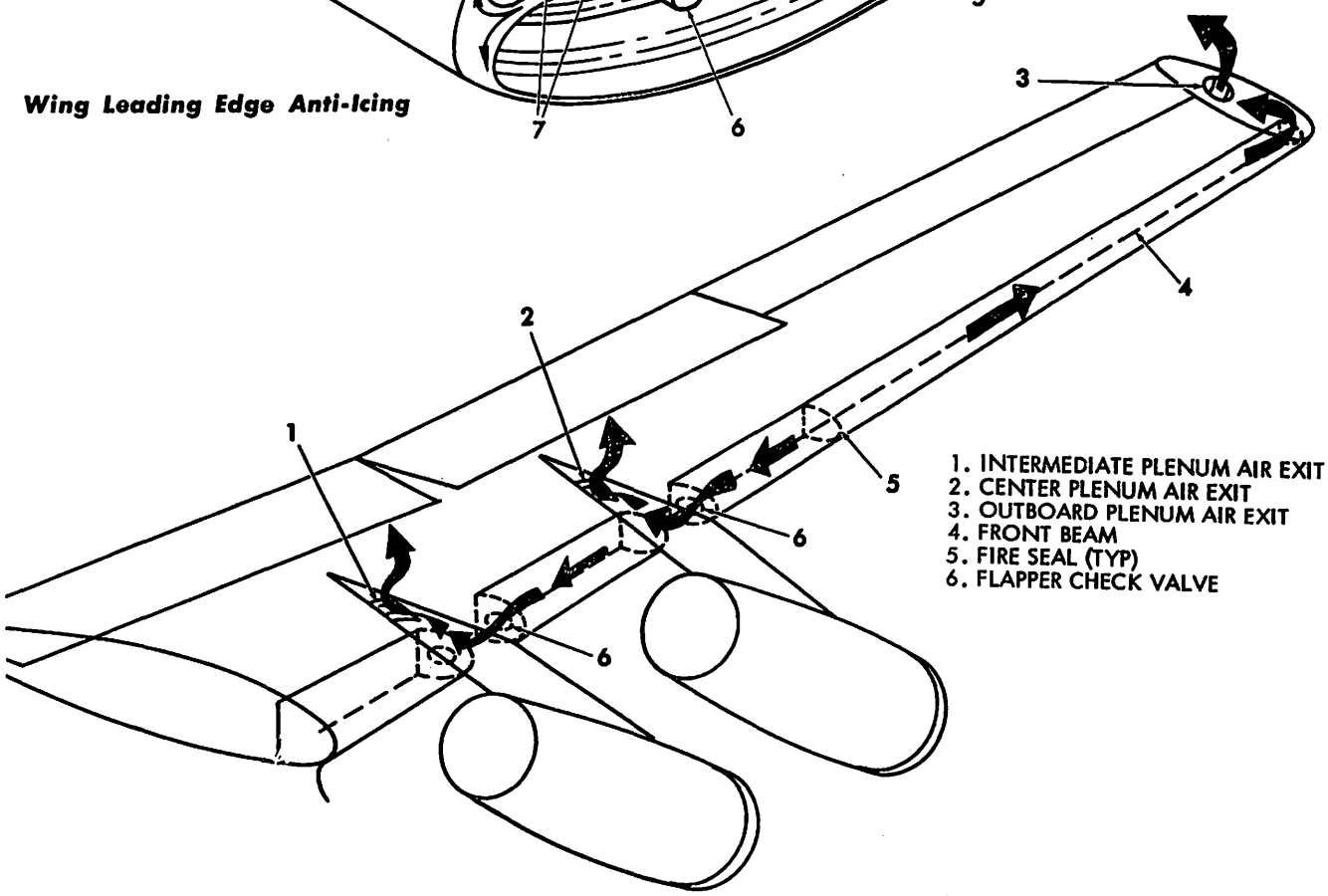

1. INTERMEDIATE PLENUM AIR EXIT
2. CENTER PLENUM AIR EXIT
3. OUTBOARD PLENUM AIR EXIT
4. FRONT BEAM
5. FIRE SEAL (TYP)
6. FLAPPER CHECK VALVE

Wing Anti-Icing Dump Provisions

breakers are all located on the flight engineer's Nr 4 circuit breaker panel.

There are three (ON-OFF) wing anti-ice switches on the pilots' overhead panel marked: OUT-BOARD, INNER-OUTBD, and MID. Each switch will control the corresponding section on both wings simultaneously.

There are four indicator lights over each switch to indicate the left and right wing on, and left and right wing overheat.

The "mod" valves are actuated from a signal from pneumatic thermostats located in the leading edge of the wing. The thermostats for the outboard, inneroutboard and mid "mod" valves are set at different temperatures to compensate for the wing area they heat and to conserve the heated air.

Located near each pneumatic thermostat is an overheat sensor. Should the temperature in the outboard or inner-outboard reach 105°C or 90°C in the mid, the wing overheat, annunciator and master CAUTION warning lights will come ON. The system will not shut down automatically.

Empennage Deicing

115 v AC 3-phase current

Empennage deicing is provided by electrical heating elements embedded in the fiberglass leading edge sections of the horizontal stabilizer. No provision is made for deicing the vertical stabilizer.

The leading edge of the horizontal stabilizer is divided into eight sections. Each section has two shedding area heaters and three parting strips for a total of 16 shedding area heaters and 24 parting strip heaters. Deicing is accomplished by intermittently applying power to the shedding area heaters individually in sequence and continuous power to the parting strip heaters. The deicing cycle always begins with the far left shedding area, which is number one, then alternates to the opposite far right side which is number two, gradually working into the center to provide symetric deicing.

The principal components of the system include the leading edge heaters, an automatic controller and a three-position ON - OFF - TEST control switch.

Placing the switch in the ON position energizes the controller which automatically monitors the system. The controller closes the circuit to the continuously heated parting strips and switches power in sequence to each of the 16 shedding areas. The length of the heating time for each shedding area is determined by a skin temperature sensor or by a maximum heating time built into the controller. The controller will allow a maximum time of 15 seconds in each shedding area. In high temperature icing conditions, the skin temperature sensor causes the controller to switch power to the next shedding area when skin temperature reaches 32°C.

32° consistently

whichever occurs first

If an entire deicing cycle is completed in less than 3 minutes, a built-in delay prevents the next cycle from starting until the 3 minute interval has elapsed.

If the controller fails during normal operation, power to the shedding areas and the parting strips is disconnected and the SYS OFF light on the overhead panel illuminates. Any shorted or open shedding area heater causes the ELEM FAULT light on the overhead panel to illuminate When the controller connectes power to that element. In case of a parting strip overheat, power to all parting strips will be disconnected and the STRIP OFF light on the overhead panel illuminates.

ELEM FAULT
SYS OFF
STRIP OFF

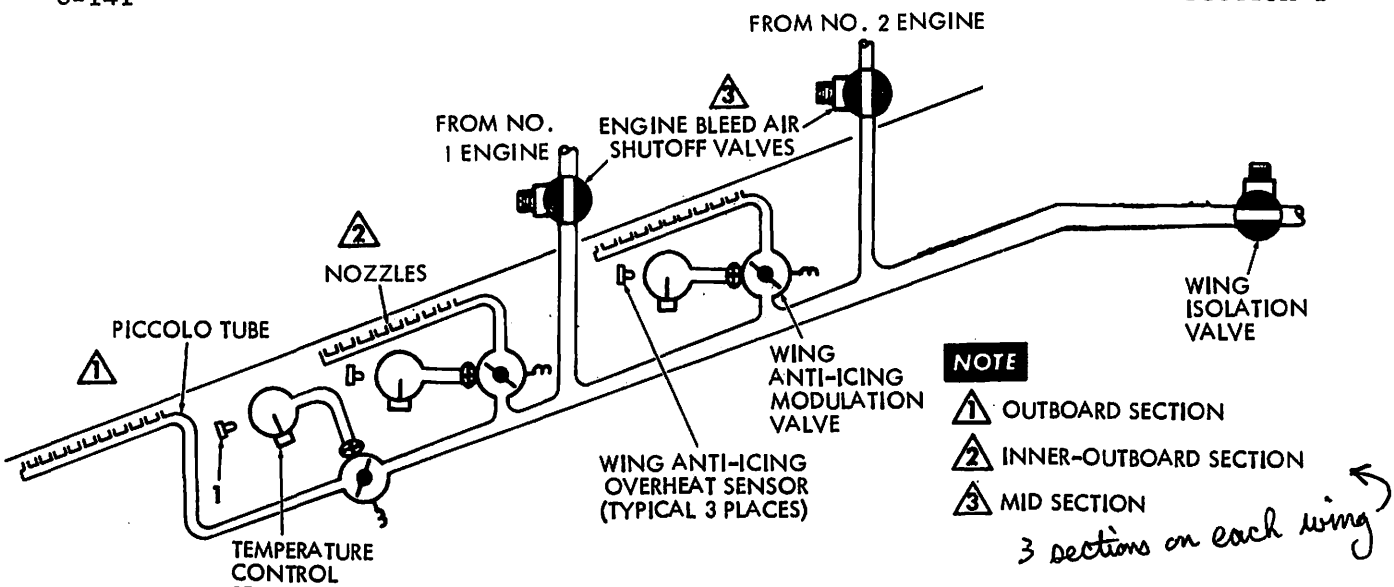

WING ANTI-ICING SYSTEM SCHEMATIC

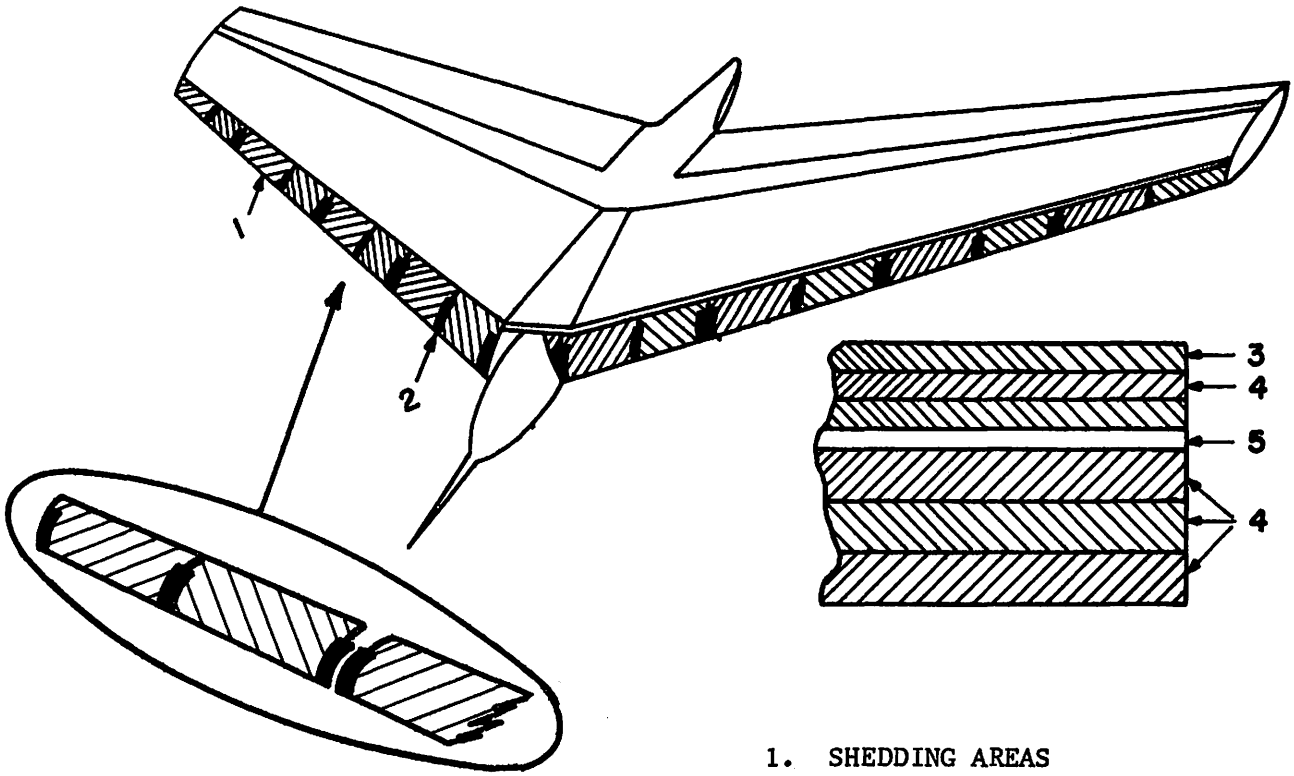

1. SHEDDING AREAS
2. PARTING STRIPS 1" x 8"
3. STAINLESS STEEL OUTER SKIN
4. EPOXY-IMPREGNATED FIBERGLASS
5. HEATER ELEMENT

EMPENNAGE AREA DEICING HEATERS

ANTI-ICING SYSTEMS CONTROL PANEL

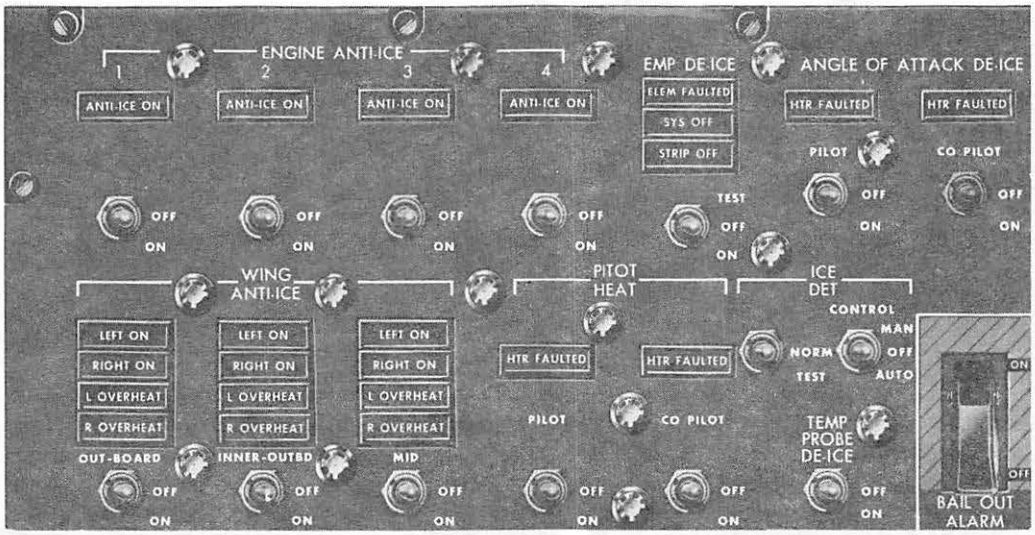

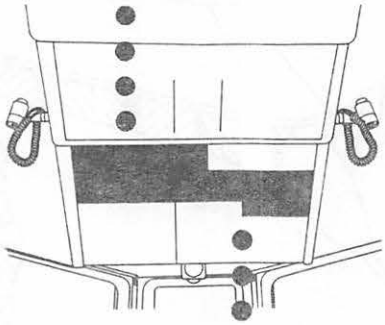

Operation of the system may be checked on the ground by placing the control switch in the TEST position. The controller will operate through a cycle but a switch controlled by the landing gear prevents application of power to the heater elements. During ground test, the STRIP OFF light should illuminate steady. The SYS OFF light should cycle ON and OFF and the ELEM FAULT light should remain OFF.

Windshield Rain Removal

The pilot's and copilot's windshields are cleared by a continuous blast of high temperature, high velocity air discharged through nozzles at the base of the windshields. Air is normally supplied by both air conditioning packs but will function satisfactorily from either pack. Whenever the windshield rain removal system is used it will automatically turn the NESA heat system off for the affected windshield.

The bleed air used in the windshield rain removal system is tapped from the downstream side of each primary heat exchanger. The system consists of a pilot's and copilot's rain removal shutoff valve, left and right pressure regulator shutoff valves, venturies, check valves and discharge nozzles. A rotary control switch and overheat lights are located on the pilots' overhead panel. All circuit breakers are located on the flight engineer's Nr 3 circuit breaker panel (Isolated DC Bus) except the one for the right pressure regulator shutoff valve which is on the flight engineer's Nr 4 circuit breaker panel (Main DC Bus Nr 2).

Rain Removal Shutoff Valves

There are two rain removal shutoff valves, one for the pilot's windshield and one for the copilot's. They are motor driven butterfly valves and are controlled by the rotary rain removal switch marked OFF - PILOT - BOTH - COPILOT.

Pressure Regulator Shutoff Valves

There are two pressure regulator shutoff valves, one controlling airflow from the left primary heat exchanger and one from the right. They are solenoid controlled and pneumatically actuated. They serve a dual function as a system shutoff valve and pressure regulator. Both valves are armed electrically when the rain removal switch is in any position other than OFF and are opened pneumatically by airflow from their respective primary heat exchanger. These valves regulate pressure to approximately 20 psi for use in the rain removal system.

Check Valves

The check valves are located downstream of each venturi. Their purpose is to prevent a backflow of pressure from one air conditioning pack to the other when operating on only one air conditioning pack.

Rain Removal Overheat Warning

Overheat sensors are embedded in the vinyl layer of the pilot's and copilot's windshields. Should either windshield temperature reach 82°C, the RAIN REMOVAL OVHT light on the annunciator panel and the appropriate rain removal OVHT light on the pilots' overhead panel will come ON. The lights will go OUT when the temperature drops to 71°C. The system will not shut down automatically.

Air Conditioning

The air used for air conditioning is supplied by the bleed air manifold

regulated to a maximum pressure of 70 psi by the system shutoff and regulator valves and routed through two parallel air conditioning packs, to the flight station and cargo compartments. Airflow from the left air conditioning pack normally supplies 38% of its flow to the flight station and the remainder to the cargo compartment. Airflow from the right pack is normally routed to the cargo compartment.

Air conditioning is accomplished by cooling bleed manifold air to 230°C through a primary heat exchanger, then routing a portion of it through a turbine refrigeration unit which cools the air to 3°C, and then mixing it with an appropriate amount of primary heat exchanger air to obtain the desired cabin temperature.

The two identical air conditioning packs are located in the center wing fillet and are made up of the following sub units: Secondary Heat Exchanger, Refrigeration Unit, Distribution Ducting, Temperature Control System, and Flow Control Shutoff Valve.

Primary Heat Exchanger

The purpose of the Primary Heat Exchanger is to provide the initial cooling of the bleed air manifold air temperature. The components making up the primary heat exchanger are the heat exchanger core, cooling air control valve, ejector shutoff valve and temperature control system.

Heat Exchanger Core

The heat exchanger core is a single pass air radiator mounted in the wing leading edge scoop. The bleed air passing through the unit is cooled by controlled flow of ram air passing over the radiator.

Cooling Air Control Valve

The cooling air control valves are motor driven butterfly valves located in the ram air duct downstream of the primary heat exchangers. The right cooling air control valve receives power from the essential AC bus Nr 1. The circuit breaker is located on the flight engineer's Nr 2 circuit breaker panel. Electric power for the left valve is supplied by the isolated AC bus. The circuit breaker is located on the flight engineer's Nr 3 circuit breaker panel. The purpose of the cooling air control valves is to control ram air flow over the primary heat exchangers. The cooling air control valves are automatically controlled by the temperature control system.

Ejector Shutoff Valve

The purpose of the ejector shutoff valves is to induce a cooling air flow over the primary heat exchangers during ground operation and at air speeds below .3 Mach. They are 28 volt DC motor driven butterfly valves and are normally controlled by the CADC system during inflight and ground operation. The air conditioning master switch in APU position will override the CADC and close the ejector valve. Two EJECTOR ON lights on the environmental control panel indicate the position of the ejector valve.

Temperature Control System (Primary Heat Exchanger)

The purpose of the temperature control system is to provide a modulated AC control signal to position the cooling air control valve for an appropriate cooling air flow. The system consists of a temperature control box, temperature sensor (230°C), and a combination anticipator and high limit sensor. The sensors are located in the ducting down-

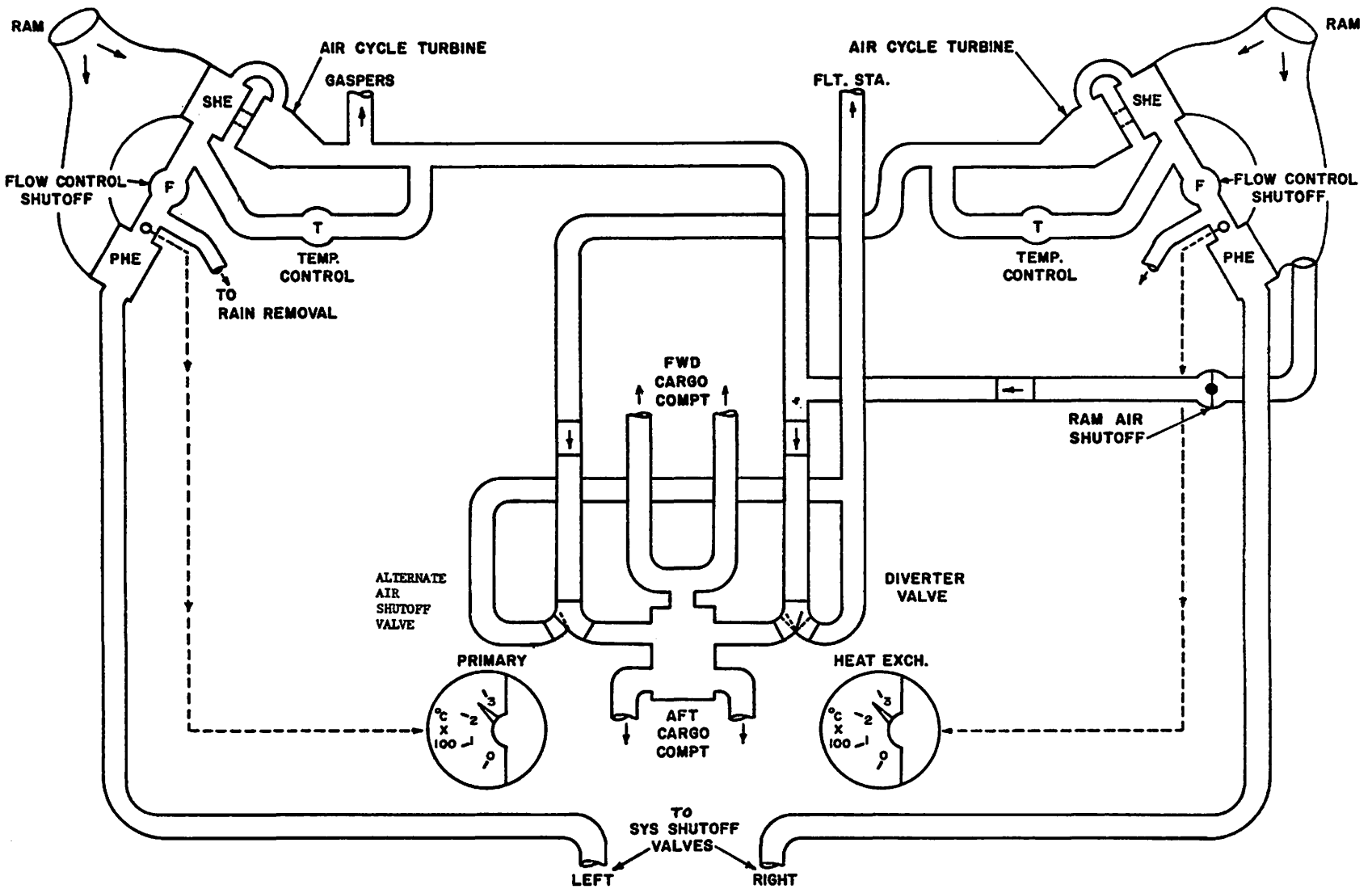

AIR CONDITIONING SYSTEM SCHEMATIC

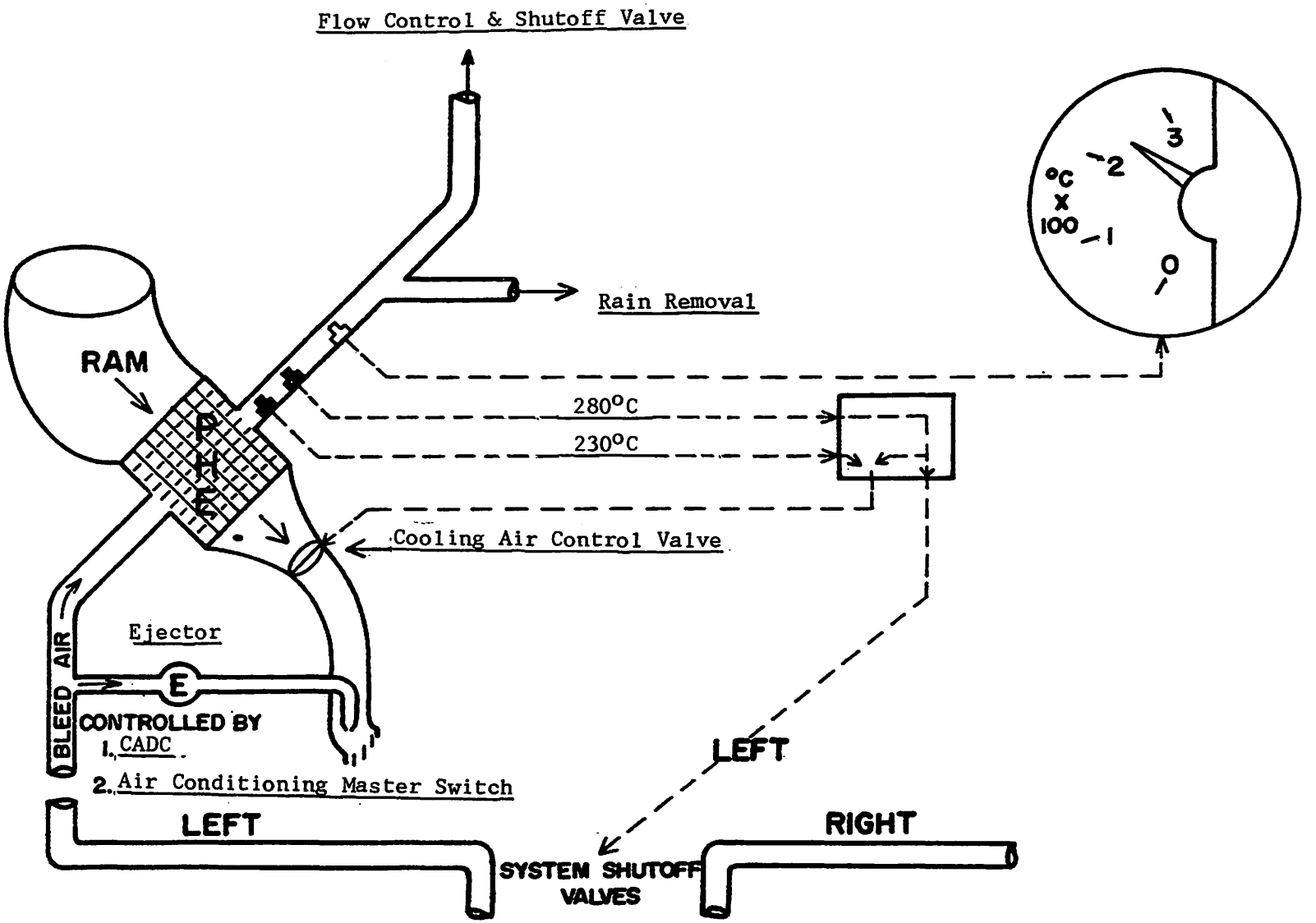

LEFT PRIMARY HEAT EXCHANGER

stream of the heat exchanger. The 230°C sensor provides the normal operating signal to the temperature control box for the positioning of the cooling air valve. The anticipator portion of the anticipator and high limit sensor detects rapid temperature changes but is non-operative during normal operation. Should the temperature reach 280°C, the high limit portion will open the cooling air control valve and close the system regulating and shutoff valve.

Flow Control and Shutoff Valve

There are two 28 volt DC motor controlled pneumatically operated flow control and shutoff valves, one for each air conditioning pack. Their purpose is to provide a constant weight air flow for air conditioning in accordance with a preset schedule based on inlet air density. The valve is solenoid controlled and pneumatically actuated. The left system valve receives power from the main DC bus Nr 1; the right system valve from the main DC bus Nr 2. Both circuit breakers are located on the flight engineer's Nr 4 circuit breaker panel.

Refrigeration System

There are two identical refrigeration systems located in the center wing section. Each system consists of a secondary heat exchanger, cooling turbine, turbine inlet, temperature sensor and turbine bypass valve, water separator, low limit temperature control sensor, temperature control valve, and compartment temperature control system.

Secondary Heat Exchanger

The secondary heat exchangers are located adjacent to the primary heat exchangers and receive cooling air from the same wing air scoop. The secondary heat exchangers differ from the primary heat exchangers in that the bleed air makes two passes in a cross counter flow pattern. Their purpose is to further lower the bleed air temperature for use in the cooling turbines.

Cooling Turbines

The cooling turbines are radial flow design and are located downstream of the secondary heat exchangers. They operate by bleed air from the secondary heat exchanger. The work expended in turning the turbine causes a rapid expansion of the air and a large drop in temperature. The cold air is then routed through a water separator to a mixing chamber in the ducting. The turbine also drives a fan fastened to the opposite end of the same shaft. On the ground the fan induces an airflow over the secondary heat exchanger thereby aiding the heat exchanger in reducing bleed air temperature. In flight the fan serves as an air preload on the turbine to prevent turbine overspeed.

Turbine Inlet Temperature Sensor

This sensor is a thermal switch in the bleed air duct between the secondary heat exchanger and the turbine inlet. Its purpose is to protect the turbine from excessive bleed air temperatures. If for any reason the turbine inlet temperature exceeds 100°C, the thermo switch will close the flow control and shutoff valve, thus shutting off bleed air to the refrigeration system. When the temperature drops to normal, the valve will open to resume normal operation.

Water Separator

The cold air from the cooling turbine is routed through a water separator to remove excessive moisture. The

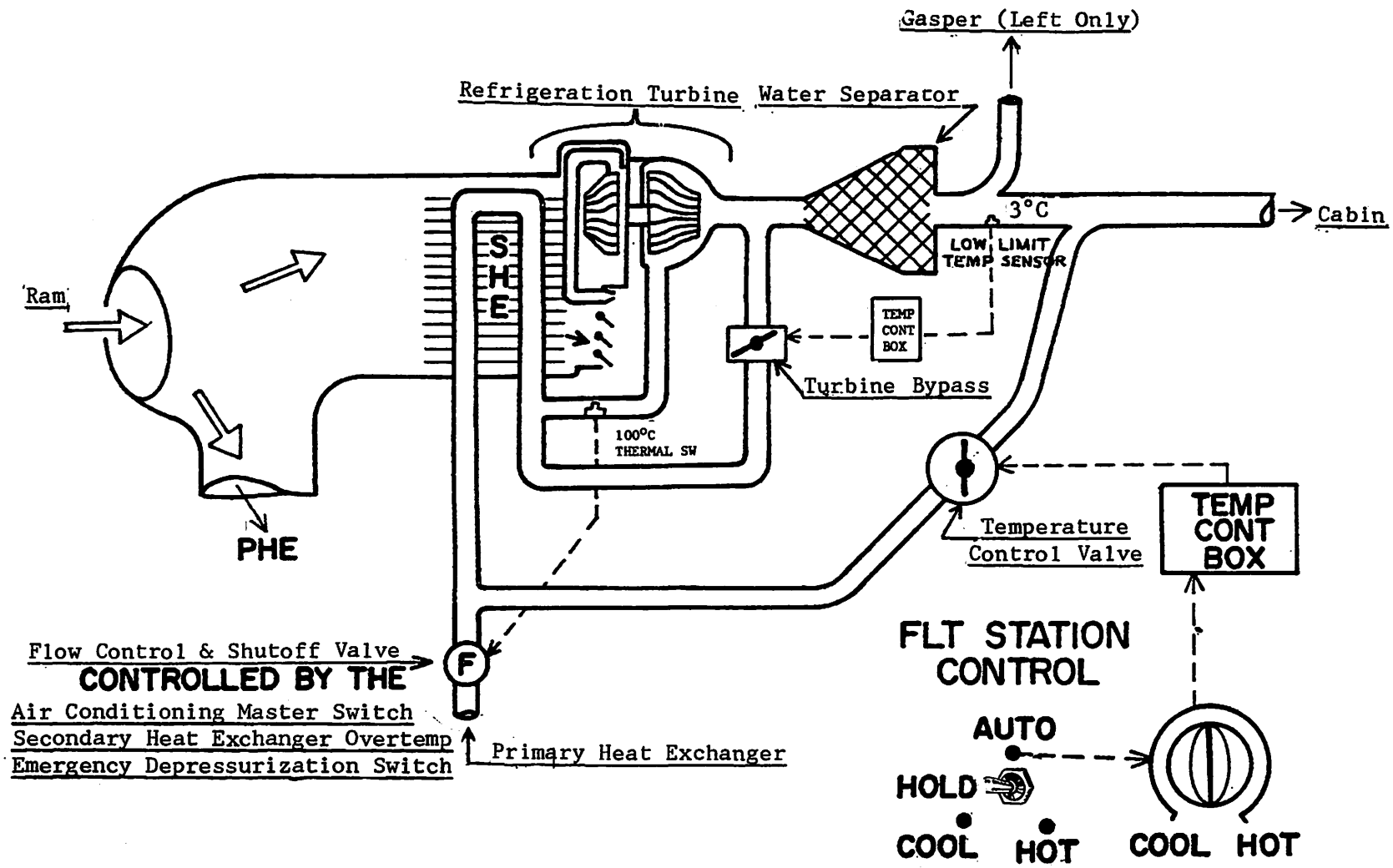

LEFT SECONDARY HEAT EXCHANGER
& AIR CYCLE TURBINE SYSTEM

water separator has a bypass valve that will allow the air to flow through in the event the separator clogs.

Low Limit Temperature Sensor and Turbine Bypass Valve

The low limit temperature sensor is located in the ducting immediately downstream of the water separator. Should the air temperature at this point drop below 3°C the sensor will send a signal to the turbine bypass valve causing it to allow some of the secondary heat exchanger bleed air to bypass the turbine and mix with the cold turbine air prior to entering the water separator. Thus, the purpose of the low limit temperature sensor and turbine bypass valve is to prevent the turbine air temperature from dropping below 3°C at the water separator outlet.

Temperature Control Valve

The purpose of the temperature control valve is to bypass 230°C temperature air from the primary heat exchanger around the refrigeration unit to be mixed with the refrigerated air downstream from the water separator. The temperature control valve is a DC motor driven butterfly valve actuated by a signal from the compartment temperature control system.

Compartment Temperature Control System

Flight station and cargo compartment temperatures are controlled by similar but separate control systems. The components of each system are the same except for their internal calibration to accomodate the temperature of each compartment.

Compartment temperatures may be controlled manually or automatically by the temperature control switches and temperature selectors on the engineer's environmental panel. The flight station temperature control switch and selector controls the left air conditioning pack. The cargo compartment temperature control switch and selector controls the right air conditioning pack.

The temperature control switch is a four-position toggle switch, AUTO, HOLD, COOL and HOT. The switch is spring loaded from the COOL or HOT position to the HOLD position. With the switch held in the COOL position, it runs the temperature control valve towards the closed position. In the HOT position, it runs the temperature control valve towards the OPEN position. In HOLD, the valve remains in the previously assumed position.

During manual operation, duct temperature is limited by a high limit temperature sensor switch located in the distribution ducting. The sensor will automatically reset when the temperature drops.

When the temperature control switch is in the AUTO position, compartment temperature is controlled by positioning the temperature selector to the desired setting. The temperature selector is a potentiometer having a range of 40°F to 110°F and makes up one leg of a bridge circuit. The compartment temperature sensor and a duct anticipator and high limit sensor make up the other two legs.

The cargo compartment temperature sensor is located in the aft cargo compartment near the cabin pressurization outflow valves. The flight station temperature sensor is located above the flight engineer's panel. Both sensors are thermistors and have a small fan that circulates compartment air over them in order to give a more accurate temperature indication. There is a temperature bulb in the cargo compartment and a temperature gage on the

environmental panel to indicate cargo compartment temperature. There is no temperature indicator for the flight station.

Distribution Ducting

There are two ducting systems for the flight station and one ducting system for the cargo compartment. The flight station has "gasper" air outlets and normal flight station outlets.

Gasper air comes directly from the left air conditioning pack downstream from the cooling turbine but prior to the temperature control valve duct junction. This supplies air to the gasper outlets. There is a gasper outlet located at each crew position and may be opened or closed manually.

Airflow to the normal flight station or cargo compartment outlets may be either refrigerated or warm air.

Flight Station Diverter Valve

The diverter valve is located in the left air conditioning pack ducting. It is controlled by the flight station air flow switch located on the environmental panel. The switch is a rotary switch with four positions: MIN, NORM, INCR, and MAX. With the switch in NORM, 38% of the left pack airflow is directed to the flight station. The INCR position directs 68% to the flight station, MAX, 100% to the flight station, and the MIN position shuts off the airflow to the flight station and directs all the air from the left pack to the cargo compartment. In all positions other than MIN the percentage of air not going to the flight station is directed to the cargo compartment.

Alternate Air Shutoff Valve

The alternate air shutoff valve is located in the right air conditioning pack duct and normally directs all the airflow from the right pack to the cargo compartment. In the event the left air conditioning pack should become inoperative, 38% of the right pack air may be directed to the flight station through the alternate air shutoff valve by positioning the air conditioning master ~~switch to RIGHT~~.

Ram Air Ventilating System

During non-pressurized flight, ram air may be used to ventilate the aircraft. The ram air intake is located in the right wing air scoop adjacent to the right primary heat exchanger. The ram air ducting connects to the left air conditioning distribution ducting just upstream from the diverter valve. This allows the airflow to be directed to the flight station and the cargo compartment as desired by positioning the diverter valve. The airflow will also back flow through the distribution ducting to the gasper outlets.

Pressurization

The flight station, cargo compartment and underdeck area are pressurized.

Pressurization is maintained by controlling the outflow of surplus air from the cabin. A maximum pressure differential of 8.3 psid is maintained by the automatic controller. This will allow a sea level cabin altitude up to an aircraft altitude of 21,000 feet or an 8,000 foot cabin altitude up to 41,000 feet aircraft altitude.

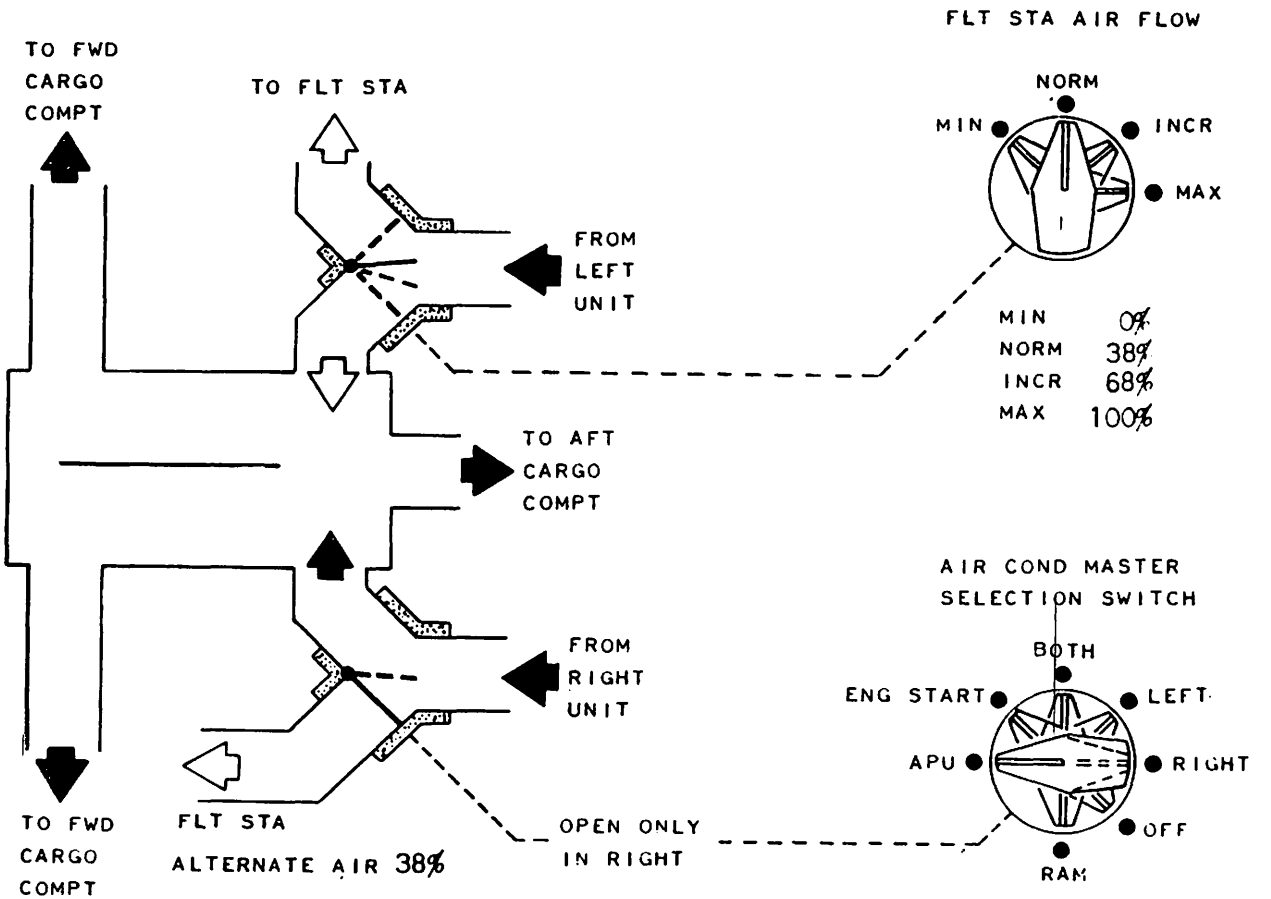

DIVERTER VALVE POSITIONING SCHEMATIC

any time cabin alt exceeds 10,000', annunciator panel illuminates with electrical failure, you must use emergency pressurization switches on emergency circuit breaker panel

The pressurization system consists of two outflow safety valves, a manual controller, automatic controller, control venturi, two solenoid shutoff valves, jet pump regulator valve, a control fan and venturi, two negative pressure relief valves, a manual and electrical depressurization system, cabin pressurization instruments, and two indicator lights.

Outflow Safety Valves regulate the 70psi air

The two outflow safety valves are located on the aft pressure bulkhead. Their purpose is to regulate the amount of cabin air outflow. The valve assembly consists of a pneumatic relay, differential control, air jet pump, a cabin limit control, cabin limit override and negative pressure control.

In response to a pneumatic signal from the automatic or manual controller, the pneumatic relay controls the normal positioning of the outflow valve. The differential control prevents the cabin from exceeding a maximum differential pressure of 8.6 psid. The air jet pump provides a reduced pressure to assist in positioning the outflow valve. The cabin limit control automatically limits cabin altitude to a maximum of 13,000 ± 1,500 feet, but may be overridden by the cabin altitude limit override switch. The negative pressure control spring set at .4 psid prevents negative cabin pressures.

Manual Controller

The manual controller located on the flight engineer's panel provides a manual means of sending a pneumatic increase or decrease signal to the pneumatic relay. The control knob has three positions: DECREASE PRESS, AUTO and INCREASE PRESS.

used to fly at less than 8.3 pressure differential if need arises

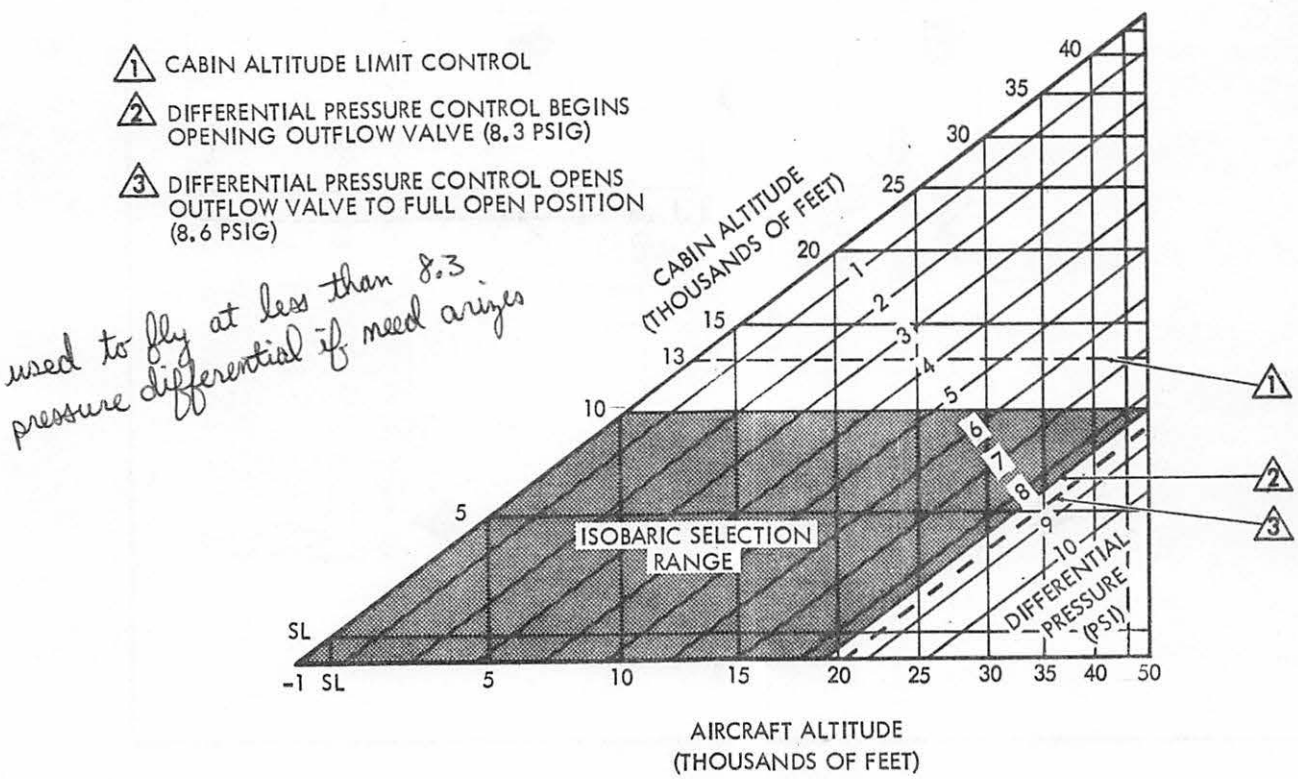

CABIN PRESSURE ALTITUDE CHART

Automatic Controller

The automatic controller located on the flight engineer's panel adjacent to the manual controller provides a means of selecting cabin altitude from -1,000 feet to 10,000 feet and controlling the rate of pressurization or depressurization from 200 to 2,000 FPM. The automatic controller also contains a differential pressure control set at 8.3 psid. — no matter what setting of automatic controller

Cabin Pressure Control Venturi

The cabin pressure control venturi is located behind the flight engineer's panel flush with the fuselage skin. Its purpose is to provide a low pressure air source for the automatic and manual controllers.

Jet Pump Regulator Valve

The jet pump regulator valve is located in the center of the cargo compartment on the ceiling. Its purpose is to regulate the bleed air pressure used by the air jet pump in the outflow valves to 15 psi. It also has an internal relief valve set at 25 psi to regulate the pressure in case the regulator valve should fail.

Solenoid Shutoff Valves

A cabin altitude limit override solenoid is located on the aft pressure bulkhead. When energized by the cabin limit override switch on the flight engineer's panel it allows bleed air pressure from the jet pump regulator valve to the cabin limit override chamber of each outflow valve. This will allow the cabin altitude to climb above 13,000 feet.

The emergency depressurization solenoid is located behind the flight engineer's panel. When energized by either the pilot's or flight engineer's emergency depressurization switch, it evacuates the control chamber of the automatic and manual controllers overboard through the control venturi, causing the outflow valves to open and depressurize the aircraft. The cabin altitude limit override solenoid is also energized by the emergency depressurization switches.

only controls outflow & safety valves

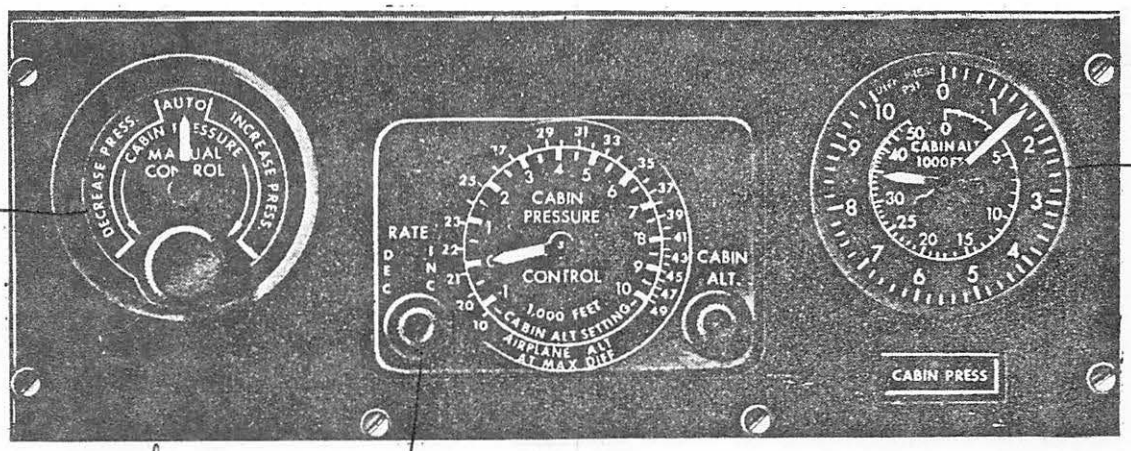

gives cabin altitude and pressure differential

manual controller

full counterclockwise - outflow & safety valve is full open - full right the valves are full closed

CONTROL PANEL

automatic controller

rate of change control (200-2000 fpm) operates only when manual control is in "auto" position

max cabin altitude manually is 13,000 ft
" " " auto is 10,000'

left emerg switch

Control Fan and Venturi

The control fan and venturi assembly is located on the aft pressure bulkhead adjacent to the right outflow valve. The purpose is to prevent accidental pressurization on the ground. The control fan is actuated by a touchdown relay and pulls cabin air through the venturi creating a vacuum sufficient to hold both outflow valves open.

Negative Pressure Relief Valves

Both negative pressure relief valves are located on the aft pressure bulkhead adjacent to their respective outflow valves. They are set to operate at .4 psid.

Emergency Depressurization

Emergency depressurization may be accomplished electrically by the emergency depressurization switch or manually by the emergency depressurization "T" handle located on the pilot's overhead panel. The emergency depressurization "T" handle opens one of the depressurization and escape hatches located at the left side of the fuselage. Emergency depressurization may be accomplished in 90 seconds electrically and in 15 seconds manually. The emergency depressurization switches will also shut down both air conditioning packs and the floor heat system.

right emerg switch

Instruments

There are two gages located on the flight engineer's panel, a cabin rate of climb and a cabin altitude and differential pressure gage. The cabin rate of climb instrument will indicate cabin rate of climb or descent from 0 to 6,000 fpm. The cabin altitude and differential pressure gage is a dual indicator. The outside scale reads differential pressure and the inside scale reads cabin altitude. There is also an identical cabin altitude and differential pressure gage located on the copilot's panel.

Cabin Altitude Warning Lights

There are two cabin altitude warning lights that illuminate whenever the cabin altitude exceeds 10,000 feet. One light is located directly below the cabin altitude and differential pressure gage at the flight engineers panel and the other is on the annunciator panel. The annunciator panel light reads CABIN PRESS LOW.

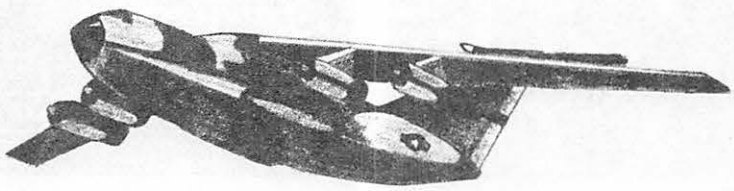

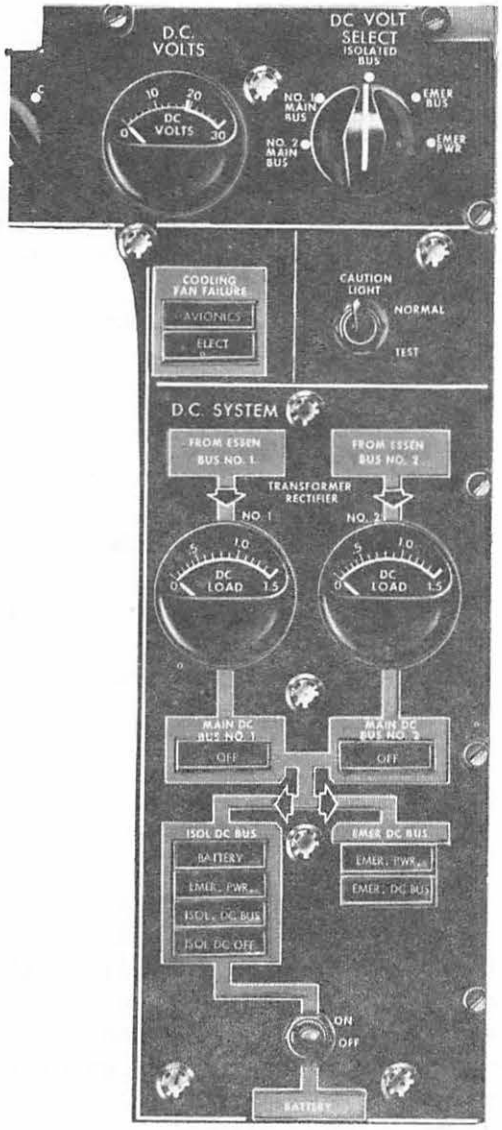

TABLE OF CONTENTS

Chapter 1

AC POWER - GENERAL

Introduction

The C-141A has a paralleled primary AC power system and a paralleled D C power system. The electrical system is designed to fulfull the following objectives.

1. No single failure or probable combination of failures shall cause complete loss of electrical power.

2. System operation and protection shall be as automatic as practicable.

3. External power shall not be required for normal engine start and warmup.

The C-141A aircraft uses a 200/115 volt, 400 cycle, three phase AC power system as the primary source of electrical power.

In flight, this power is supplied by four 50 kilovolt ampere (KVA) engine-driven generators.

During ground operation, the 200/115 volt, 400 cycle, three phase AC power is supplied by one of two sources: An auxiliary power unit (APU) driven generator, or an external power source.

During inflight emergencies, the 200/115 volt, 400 cycle, three phase AC power is supplied by a 2 KVA hydraulically-driven emergency generator.

The four engine driven generators, the APU generator and external power are controlled from the flight engineer's panel. Emergency generator operation is automatic, but can be controlled manually from the pilot's instrument panel.

AC Bus Arrangement

The AC bus systems consist of a Main AC Tie Bus, four main AC buses, and two Essential AC Load Systems.

Essential AC Load System Nr 1 consists of:

Essential AC Bus Nr 1
Avionics AC Bus Nr 1
Navigation AC Buses Nr 1 and Nr 2
Isolated AC Bus
Isolated Avionics AC Bus
Emergency AC Bus
Transformer-Rectifier Unit Nr 1

Essential AC Load System Nr 2 consists of:

Essential AC Bus Nr 2
Avionics AC Bus Nr 2
Transformer Rectifier Unit Nr 2

AC power is normally supplied by the four main generators operating in parallel through bus tie contactors (BTC) to the Main AC Tie Bus. Main AC Buses Nr 1 and Nr 4 are normally supplied AC power by their respective generators through individual generator line contactors (GLC). Main AC Buses Nr 2 and Nr 3 are normally supplied AC power through individual generator line contactors (GLC) and load monitor relays.

In the event of a generator failure, its respective Main AC Bus will be supplied AC power from the Main AC Tie Bus through a bus tie contactor (BTC). The load monitor relays for Main AC Buses Nr 2 and Nr 3 will automatically OPEN, if three main generators fail, or if the APU generator is the only source of power. The load monitor relays can be overriden and held closed by means of auto-load disconnect switches, located on the flight engineer's panel.

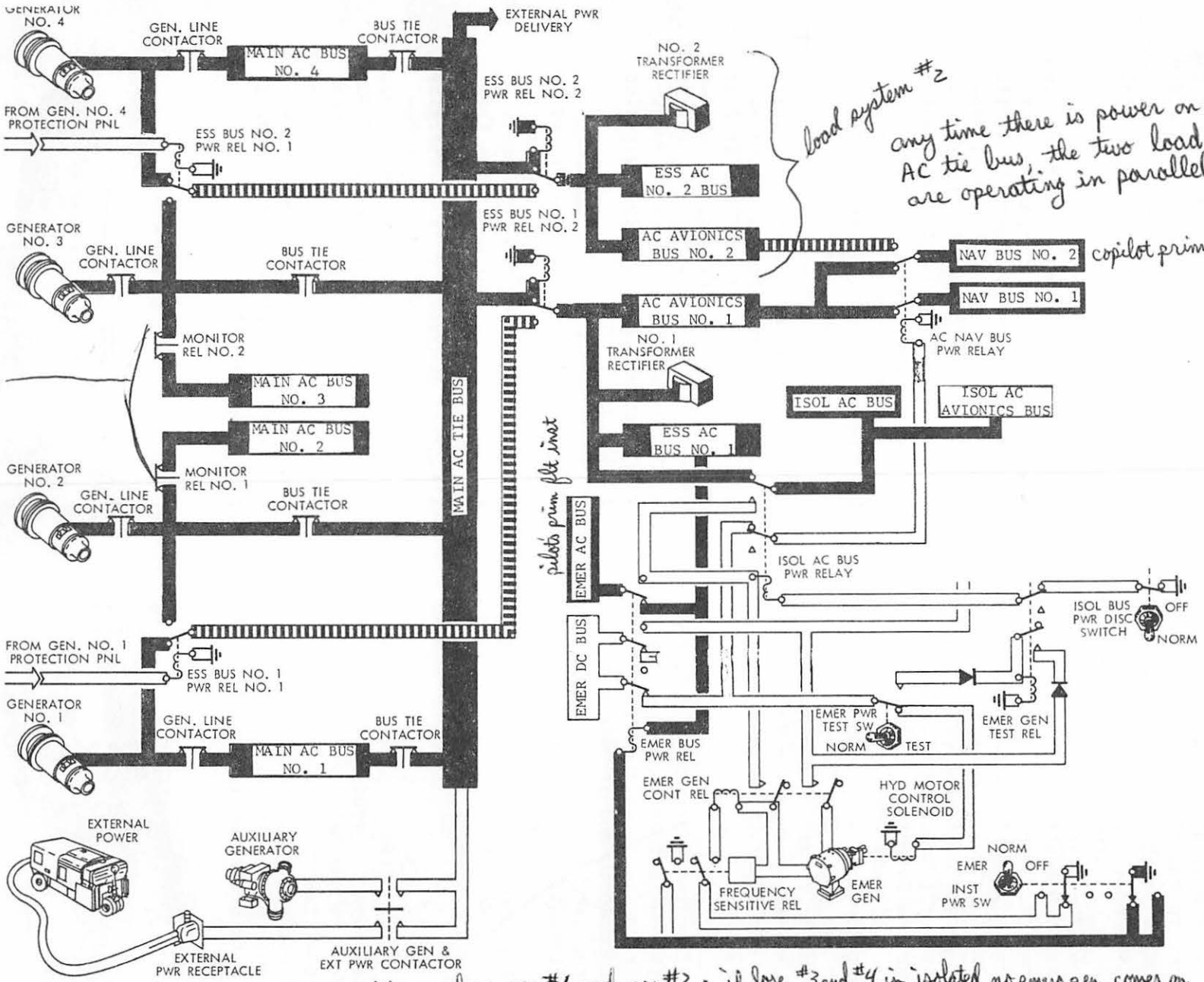

load system #2

any time there is power on main AC tie bus, the two load systems are operating in parallel

copilot prim flt inst

pilot's prim flt inst

sense single-generator operation

in isolated mode, emerg gen comes on if you lose gen #1 and gen #2; if lose #3 and #4 in isolated, no emerg gen comes on

AC POWER DISTRIBUTION

in parallel mode, all 4 gen must be lost for emerg gen to come on line

"parallel" is in reference to both load systems drawing power from AC tie bus

"isolated" means no power on AC tie bus

In the event the Main AC Tie Bus shorts to the structure, protective circuits in the respective generator systems will open the bus tie contactors (BTC) automatically. This causes the AC Bus System to be placed into Isolated Operation. In this type of operation, each generator will continue to power its associated Main AC Bus. In addition, generator Nr 1 will power the Essential AC Load System Nr 1 and generator Nr 4 will power the Essential AC Load System Nr 2. If generator Nr 1 should fail, generator Nr 2 will automatically take over and power the Essential AC Load System Nr 1, and if generator Nr 4 should fail, generator Nr 3 will take over and power the Essential AC Load System Nr 2.

The disadvantages of this type of operation is that if a generator fails, power to its associated Main AC Bus will be lost, and if both generators on the same side fail, power to one of the Essential AC Load Systems will also be lost. Example: If Nr 3 and Nr 4 generators fail, power will be lost to Main AC Buses Nr 3 and Nr 4, and the Essential AC Load System Nr 2.

The Essential AC Load System Nr 1 can be supplied AC power from anyone of three separate sources. The normal source is the Main AC Tie Bus. If the Main AC Tie Bus is de-energized, all bus tie contactors (BTC) OPEN, and the Nr 1 generator is operating, Essential AC Load System Nr 1 will automatically be supplied by Nr 1 generator. If the Main AC Tie Bus is de-energized and Nr 1 generator is not operating, Nr 2 generator will automatically supply this power.

Essential AC Load System Nr 2 can be supplied by three separate sources. The normal source is the Main AC Tie Bus. If the Main AC Tie Bus is de-energized, and the Nr 4 generator is operating, Nr 4 generator will automatically supply this power. If Nr 4 generator is not operating, then Nr 3 generator will automatically supply this power.

Navigation AC Bus Nr 1 can <u>only</u> be supplied power from Avionics AC Bus Nr 1. Navigation AC Bus Nr 2 is normally supplied by Avionics AC Bus Nr 1, however, if Avionics AC Bus Nr 1 is de-energized, Avionics AC Bus Nr 2 will automatically supply Navigation AC Bus Nr 2.

The Isolated AC Bus, Isolated Avionics AC Bus and Emergency AC Bus can be supplied by two separate sources. The normal source is the Essential AC Load System Nr 1. If Essential AC Bus Nr 1 is de-energized, the emergency generator will automatically supply power to these buses. In addition, if the Essential AC Bus Nr 1 is energized and the Instrument Power switch on the pilot's instrument panel is placed to the EMER position, the emergency generator will supply power to these buses.

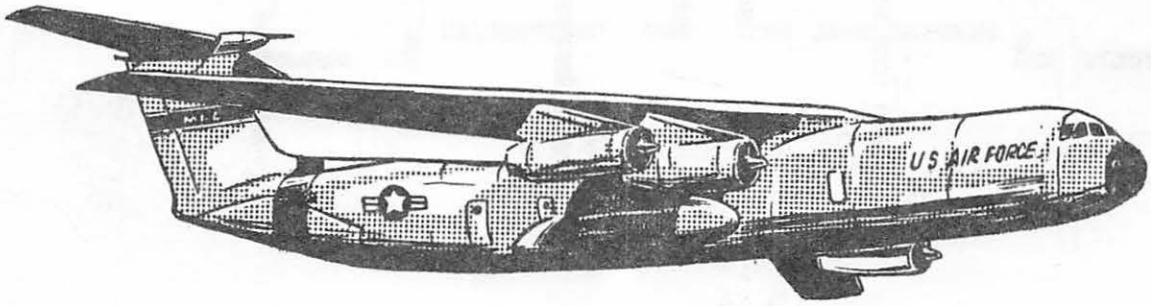

Chapter 2

DC POWER - GENERAL

Introduction

DC electrical power is normally supplied by two transformer-rectifier units connected in parallel. The emergency generator furnishes emergency DC power if the normal DC power fails. A 24 volt, 11 ampere-hour, lead-acid battery supplies control and ignition power through the Isolated DC Bus for starting the APU.

Transformer-Rectifier Units

The input to the transformer-rectifier units is 200/115 volt AC power. The output of the units will normally be 28 volts DC with a maximum amperage rating of 200 amperes each. The output of the T-R units varies inversely with the magnitude of the load applied to the DC system. Under load conditions of 5 to 200 amperes, the voltage output will vary from 29 to 25 volts.

A transformer-rectifier which forms an integral part of the emergency generator provides voltages in a 24 to 30 volt range when the emergency generator is operating.

Battery

The 24 volt, 11 ampere-hour lead-acid battery, located in the underdeck area, can supply power to two buses; the Isolated DC Bus and the Isolated Avionics DC Bus. It is used primarily to supply control and ignition power for starting the APU.

The battery switch, located on the flight engineer's electrical control panel, is a two position, OFF-ON switch. When the switch is placed in the ON position, the battery relay will close and connect the battery to the two isolated DC buses.

DC Bus Arrangement

The DC system buses consist of:

Main DC Buses Nr 1 and Nr 2
Main DC Avionics Buses Nr 1 and Nr 2
Isolated DC Bus
Isolated DC Avionics Bus
Emergency DC Bus

The Main DC buses Nr 1 and Nr 2 are normally powered by their respective T-R units. Each Main DC Bus is connected to its T-R unit by a reverse current relay which closes automatically, when the transformer-rectifier's voltage is 0.7 to 1.00 volt above bus voltage. The reverse current relay automatically removes the T-R unit from the bus, if the reverse current exceeds certain limits.

A 400 ampere current limiter interconnects the main DC buses and permits either T-R unit to supply both main DC buses. The current limiter also serves to separate the main DC buses from each other in the event of a fault on either one.

The Isolated DC Bus and Isolated DC Avionics Bus are normally powered from Main DC Bus Nr 1 through a 325 ampere current limiter and an isolated bus reverse current relay. The current limiter protects the main DC buses against faults on either isolated bus. The isolated bus reverse current relay prevents the emergency generator from supplying power to the main DC buses.

The Emergency Bus is powered by the Isolated DC Bus through an emergency bus power relay for normal operation. This relay will automatically connect the output of the emergency generator to the Emergency DC Bus and Isolated DC buses in the event Essential AC Bus Nr 1 becomes de-energized.

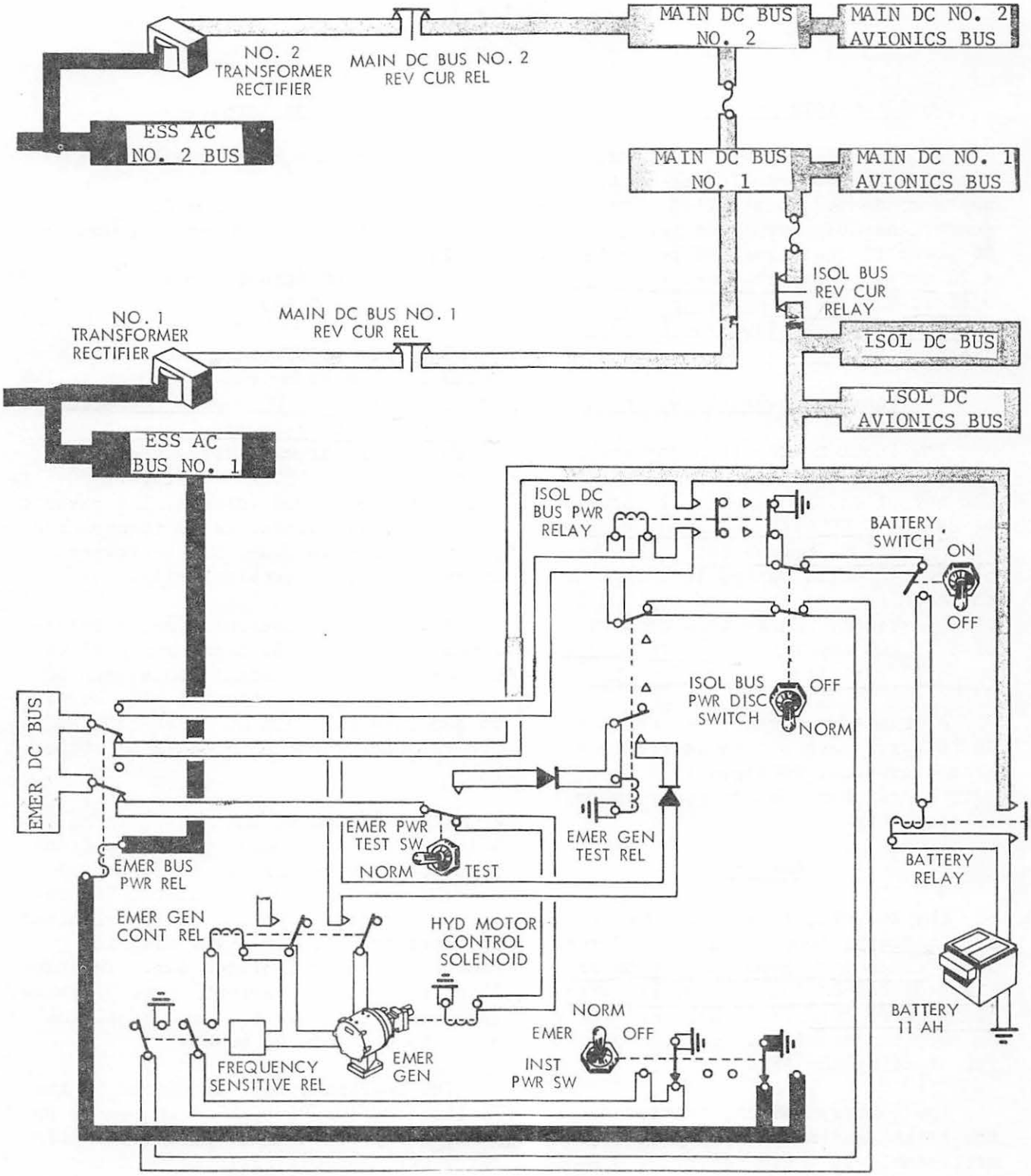

DC POWER DISTRIBUTION

Underspeed

A flyweight actuated underspeed switch is installed in each constant speed drive (CSD) unit. This switch is closed and grounds out the generator control panel until the generator speed reaches 5700 rpm, at which time the underspeed switch opens allowing the generator to begin operation. This switch will again reclose if the speed drops below 5400 rpm.

Undervoltage

During normal system operation, the undervoltage relay is energized. If an undervoltage condition should occur, the undervoltage relay will de-energize and through its contacts apply voltage to two different time delay relays. One time delay is a 3 second delay and the other is a 6 second delay.

After 3 seconds, the first time delay relay energizes a bus tie lockout relay. The bus tie lockout relay opens the bus tie contactor and holds it open. If removing the generator from the main tie bus clears the fault that caused the undervoltage condition, the undervoltage relay will re-energize and the 6 second time delay will be interrupted.

If the fault is not cleared after 6 seconds, the second time delay relay will open the generator line contactor and cause the voltage output of the generator to drop to zero.

The bus tie contactor can be reset by turning its respective bus tie switch to the OPEN position. The generator line contactor can be reset by turning its respective generator control switch to the OFF position.

Overvoltage

The overvoltage circuit has an inverse time delay in that the higher the voltage, the shorter time it takes to open the generator line contactor and reduce the generator voltage to zero.

Reactive Bias

Reactive bias is a result of parallel operation. During parallel operation, if the current supplied by the controlled generator and the average current of all generators in parallel is not the same, a voltage is developed by the reactive bias circuit. This voltage will either add or subtract to the reference voltage supplied by the voltage regulator. This will lower the overvoltage trip point of the generator if it is supplying more than its share of the load or will raise the undervoltage trip point of the generator if it is supplying less than its share of the load.

Differential Fault

A current sensing transformer is installed around each of the generator ground leads and an identical transformer is installed around the power leads. Should a differential fault (power lead shorted to ground) occur between these transformers, a differential protection relay will operate. The differential protection relay will operate the differential lockout relay. This causes the generator line contactor to open and generator voltage drops to zero. Once energized, the differential lockout relay remain energized until the permanent magnet generator (PMG) output is removed. After PMG power has been removed, the differential lockout relay can be reset by depressing the DLR reset button on the main protection panel.

NOTE: The GENERATOR·OUT light will come ON and remain ON with the generator switch OFF when a differential fault has occurred.

Neutral Current

The neutral current sensing circuit detects an open or shorted phase. If an abnormal neutral current (unbalanced current between phases) exists in a single generator system, the neutral current relay will energize and remove that generator from operation by using the same actions and sequence as the undervoltage circuit.

If the neutral current problem is on the tie bus where it affects all four generators, the neutral current circuits will open all four bus tie contactors putting the electrical system in Isolated Operation.

Unbalanced Current

During paralleled operation if unbalanced loads occur between the generators, a time delay relay will remove the generator from the tie bus in approximately 8 seconds.

Auto Paralleling

The auto paralleling circuit is only used when a generator is placed on the tie bus. The auto paralleling circuit will check the generator and if its voltage is in phase with the power on the tie bus, the bus tie contactor is allowed to close, then the auto paralleling circuit is no longer used.

NOTE: No paralleling provisions exist for External or AUX Generator Systems; therefore, paralleling is for the main generators only.

Generator Line Contactor (GLC)

The generator line contactor (GLC), when in the closed position, connects the output of the generator to its associated main AC bus. The GLC is controlled by its respective generator control switch located on the flight engineer's control panel.

Bus Tie Contactor (BTC)

The bus tie contactor (BTC) connects the output of its associated generator to the Main AC Tie Bus. The BTC will also connect power from the Main AC Tie Bus to an individual main AC Bus in the event that its associated generator should fail. The BTC is controlled by its respective bus tie switch located on the flight engineer's panel.

Constant Speed Drive (CSD)

The constant speed drive (CSD) is a hydraulic differential transmission which is driven by the jet engine accessory gear box at variable speeds. The CSD drives a 50 KVA generator at a constant speed. At input speeds between 4,100 rpm and 8,500 rpm, the CSD is capable of driving the generator at a constant 6,000 rpm. The controlled 6,000 rpm to the generator insures a constant frequency of 400 cycles per second.

The CSD oil supply is contained in a stainless steel tank located on the left side of the engine fan case. This tank is the oil reservoir for both the CSD and the thrust reverser systems. There are two separate supply lines from the tank, one for each system. The CSD supply line is connected to a standpipe inside of the oil tank. If an oil leak develops, the standpipe prevents all of the oil from draining out of the tank into the leaking CSD system.

Oil leaving the tank enters the CSD. After being used in the CSD, it is ported through the CSD oil cooler, through a temperature regulating and pressure bypass valve and back to the oil tank.

To correctly monitor the operation of the CSD, there is a CSD oil temperature indicator and a CSD OVERHEAT light located on the flight engineer's electrical control panel.

The oil temperature indicator is marked off in degrees centigrade from minus 50 to plus 200. The normal operating range is minus 50°C to plus 135°C, the caution range is 135°C to 180°C, and the indicator is red lined at 180°C. The indicator is controlled by a temperature bulb in the oil return line between the CSD and CSD oil cooler.

The CSD may operate normally with oil temperature in the 135° to 170°C range provided the following limits are not exceeded:

135°C for 40 minutes
145°C for 20 minutes
155°C for 15 minutes
165°C for 4 minutes
170°C for 1 minute

The CSD should be immediately disconnected when CSD oil temperature is at or above the red line.

The CSD OVERHEAT light is controlled by a thermal switch located in the CSD. The light illuminates if the oil temperature in the CSD exceeds 179° ± 5.5°C.

Aircraft may be equipted with all three CSD's, General Electric, Modified General Electric, and Sunstrand CSD's may be found on the same aircraft.

If a CSD OVERHEAT light illuminates, disconnect the CSD immediately. Light illumination may indicate loss of oil pressure or a CSD overheat condition.

The input shaft disconnect is mounted on the input end of the CSD housing. It couples the output drive of the engine accessory gear box with the input hydraulic unit of the CSD. The disconnect is a solenoid operated and controlled by a CSD disconnect switch on the flight engineer's panel. The drive may be disconnected anytime the engine is operating by positioning the CSD disconnect switch. Once disconnected, the drive can be re-engaged by pulling a reset handle mounted on the housing of the CSD. This can be done only on the ground with the engine stopped to prevent damage to the disconnect assembly.

The CSD converts variable engine speeds to a constant speed required to drive the generator. This is accomplished basically by employing the use of two ball piston hydraulic units within the CSD. An input hydraulic unit is connected to the input drive shaft and an output hydraulic unit to the output drive shaft. Both units are free to rotate independently of each other under static conditions. Under operating conditions, an oil pump within the CSD supplies oil to the two hydraulic units. Through a pumping action upon this oil by the input hydraulic unit, as controlled by a governor, a variable hydraulic pressure is applied to the output ball piston unit. This action results in a connection between the two hydraulic units converting the variable input speed to a constant output speed.

The control governor assembly consists of a governor flyweight assembly and a reference spring which are connected to a control valve. The control governor assembly also contains an overspeed-underspeed control. The control governor flyweights are driven through a drive gear by the output drive shaft. Any off-speed of the output drive shaft will cause the flyweights to reposition the control valve, porting high oil pressure to either the increase or decrease speed side of the stroking piston.

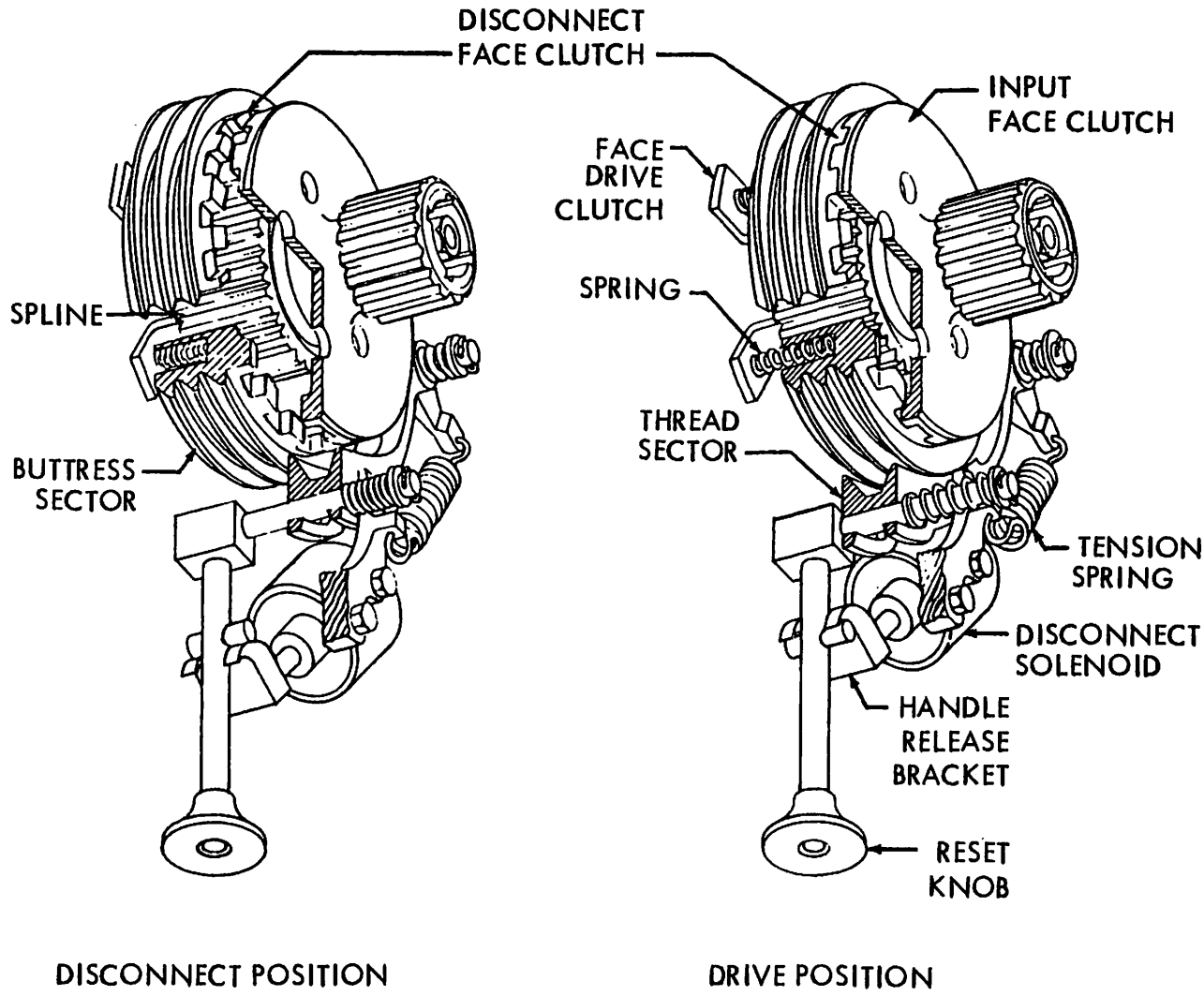

CSD INPUT SHAFT DISCONNECT

A load biasing solenoid is connected to the governor control valve to change the position of the valve as dictated by either increase or decrease speed signals originating in the load controller. The purpose of the load controller is to sense an unbalanced load between its generator and the average load of the generators on the Main AC Tie Bus. The load controller corrects for an unbalanced load by sending appropriate signals to the load biasing solenoid.

The overspeed-underspeed control assembly is designed to accomplish two separate functions. The overspeed section prevents the output speed of the CSD from exceeding 7200 rpm. The underspeed section prevents the generator from connecting to the bus if the output speed is too low.

G E ONLY

During an overspeed condition, the overspeed flyweights will position the overspeed transfer valve. The transfer valve will then port oil to the input hydraulic unit positioning it for maximum decrease rpm, approximately 5400 rpm. The transfer valve will then be locked in this position until the CSD is shut down.

NOTE

The Sunstrand CSD has a relief valve which prevents overspeed.

The movements of the underspeed flyweights will actuate the underspeed switch. When the CSD speed drops below 5400 rpm, the underspeed switch will close and de-energize the generator. When the speed of the CSD is increased to 5700 rpm, the underspeed switch will open and cause the generator to become energized.

Load Controller

The load controller provides an electric trim to the governor of the constant speed drive to insure proper sharing of the real load during parallel operation of two or more generators. When the loads delivered by each generator in the parallel system are not equal, a signal voltage is developed and applied to each load controller. This signal is of such polarity as to produce opposite effects on the load controllers. This causes the load controller for a high output generator to lower the load on that generator and the load controllers for the low output generators to raise the load on their generators. The reverse would be true for a generator that had a low output.

Auxiliary Power Unit

will power all buses except #2 and #3 main AC

The APU located in the left wheel well supplies air for engine starting, air for the environmental systems and mechanically drives an AC generator, identical to the main generators, for ground operation only. The APU controls receive power from the Isolated DC Bus through circuit breakers on the flight engineer's Nr 3 circuit breaker panel.

The APU is started by a hydraulic motor which receives its power from two accumulators. These accumulators are pressurized from Hydraulic System Nr 3. Either accumulator may be selected for starting.

Speed of the APU is controlled by the fuel governor which regulates the fuel flow to maintain a constant speed under varying load conditions. A centrifugal

remove air load & power load from APU before starting
generator switch not even activated until APU reaches 95%

APU: AIR for environmental control
air for engine start
electrical power

★ "power selector switch" selects one of the 3 normal sources of AC power for the main AC tie bus. ★ ↗ connects APU generator to main AC tie bus

speed switch closes the fuel valve in the event turbine speed exceeds 110 percent.

The APU control switch is a three-position, OFF-START-RUN rotary switch. Placing the switch to START closes the self-holding start relay. This relay will remain closed until the circuit is opened by the centrifugal speed switch at 35 percent. When the switch is released from START, it will move to RUN by spring-action. When the switch is at RUN, all APU controls are energized and controlled by their automatic controls.

The APU door control switch is a three-position, OPEN-OFF-CLOSED switch. The doors must be fully open before the APU can be started. Automatic closing is initiated by pulling the FIRE PULL handle or by actuation of the touchdown relays. If the aircraft becomes airborne with the APU running, the APU will shut down. When the APU oil pressure drops below 3.5 psi, the doors close.

constant fuel control of APU ⟹ constant RPM ⟹ constant gen RPM

The bleed load and flow control valve switch controls the normally closed solenoid operated bleed air valve. The switch is interlocked with a 95 percent speed switch which prevents a bleed load from being applied to the APU until it reaches operating speed. Placing the switch to OPEN will supply air for the environmental systems or engine starting.

There are two FIRE PULL handles for the APU, one on the flight engineer's panel and one in the cargo compartment. When either handle is pulled, the APU shuts down, the doors close and the fire extinguishing agent discharge switch is armed.

The indicators for the APU consist of three lights and an exhaust gas temperature (EGT) indicator. The START light illuminates to indicate that the starter is operating. The light goes OUT when the APU reaches starter cutout speed. The ON SPEED light illuminates to indicate the APU is operating at 95 percent. The door warning light illuminates to show NOT CLOSED when the APU doors are not closed.

Oil from an externally mounted oil tank is delivered through the oil pump mounted on the accessory case. A relief valve maintains desired oil pressure. Temperature is maintained by an oil cooler. An oil temperature switch automatically shuts the APU down if the temperature exceeds 120°C. A low oil pressure switch automatically shuts the APU down if the pressure drops below 55 psi. A sequencing switch is actuated at approximately 3.5 psi when starting and completes the circuit to the ignition unit. During APU shut down, the door closing circuit is completed through the switch when the oil pressure drops to approximately 3.5 psi.

start light illuminates when APU CONT switch is momentarily moved to start position

comes out 3/8 in

pulling handle arms agent discharge

APU CONTROL PANEL

batt powers: isol DC
isol DC avionics

APU connected to isol DC

↓primary purpose is to give fuel and ignition to APU

APU fire: ~~[illegible]~~ know all the indications
battery start gives protection but no detection - you can extinguish fire

accumulator also gives ten applications of brakes
460 strokes on hand pump - takes 2 men 45 minutes

In normal operation, to start the APU:

1. Bleed load switch CLOSE.
2. APU generator switch OFF.
3. Place the APU door switch to OPEN.
4. Select the Nr 1 accumulator.
5. Then hold the APU master switch in the START position.
6. Release switch to the RUN position.
7. The ON SPEED light should come ON within 20 seconds. or less
   ie between "start" light and "on speed" light
8. As soon as the ON SPEED light illuminates, place the bleed load control switch to OPEN and the APU generator switch to ON.

In order to shut the APU down:
let APU stabilize with no load for 2 minutes

1. Place power selector switch to OFF.
2. Auxiliary generator control switch OFF.
3. Place the bleed load and flow control valve switch to CLOSE.
4. Place APU control switch to OFF.
5. Finally, place the APU door switch to CLOSED.

The APU will shut down automatically under any of the following conditions:

1. Overspeed of 110 percent.
2. Oil temperature in excess of 120 degrees C.
3. Oil pressure below 55 psi.
4. Aircraft becomes airborne.

4 reasons why APU shuts down automatically: outside 95-110%
oil pressure < 55 psi
oil temp above 120°C
touchdown relay opens

ASIMIR, ETHIOPIA - base at 8,000 ft

Auxiliary Generator

An auxiliary AC generator, identical to the main engine driven AC generators, is installed to supply electrical power for ground operation only. This generator is driven by the auxiliary power unit (APU) and is installed in the forward end of the left wheel well. Operation of the auxiliary generator is essentially the same as the main engine driven generators.

The auxiliary generator is capable of supplying AC power to all aircraft buses except Main AC Buses Nr 2 and Nr 3. These buses may be supplied by utilizing the auto-load disconnect switches and manually monitoring the bus loads to prevent overloading. AC power from the auxiliary generator is sent to the transformer rectifier units to be rectified into DC for all DC buses.

External AC Power

will power all buses

Power from an external AC source can be supplied to the aircraft during ground operations. External AC power will power all AC buses.
must be 3 phase AC equal to 50 KVA

The external power system consists of an external AC power receptacle, located on the forward right side of the fuselage, an external power contactor, a portion of the bus protection panel, an EXTERNAL POWER READY light, and an EXTERNAL POWER ON light. (green) on any time external power is powering the buses

A control circuit breaker is in the external power receptacle. The circuit breaker protects circuits in the bus protection panel.

On aircraft 50261 and up, and aircraft modified by T.O. 1C-141A-860, a control DC circuit breaker, installed on the main AC power distribution center, protects the aircraft bus protection panel against ground faults in the

external power source.

An indicator light at the external power receptacle goes ON and reads EXT PWR ON, when external power is supplying the aircraft buses.

An indicator light labeled EXT POWER located on the flight engineer's panel goes ON and reads READY when external power of the proper phase and minimum voltage is applied to the aircraft.

NOTE: Check that the voltage and frequency are within limits before connecting to aircraft.

Bus Protection Panel

The bus protection panel provides phase sequence and undervoltage protection when the electrical system is supplied from an external power source.

Three-phase voltage from the external power receptacle is rectified to supply DC voltage for operation of other circuits in the bus protection panel. If the phase sequence and the voltage of the three-phase external power is correct, a phase sequence relay will energize and close the external power contactor. If the external power source voltage should drop, the phase sequence relay would de-energize and cause a lockout relay to energize and open the external power contactor.

NOTE: The lockout relay can only be de-energized by completely removing external power from the aircraft.

Emergency Generator

The purpose of the emergency generator is to supply power to operate one set of flight instruments, engine instruments, warning systems, and a limited amount of navigation and communication equipment in the event that all main generators fail.

The emergency generator can supply power to a total of 6 buses; 3 AC buses, and 3 DC buses. These buses are the:

Isolated AC Bus
Isolated AC Avionics Bus
Emergency AC Bus
Isolated DC Bus
Isolated DC Avionics Bus
Emergency DC Bus

The emergency generator, which is located in Hydraulic Service Center Nr 2, has a continuous rating of 2 KVA AC and 20 amperes DC. The generator is driven by a hydraulic motor which is supplied hydraulic fluid from the Nr 2 Hydraulic System. Emergency generator operation is automatic, but can be manually controlled by the instrument power switch located on the pilot's instrument panel.

An electrically controlled hydraulic motor control solenoid, energized to the closed position, prevents hydraulic fluid from driving the hydraulic motor. If the emergency bus power relay is de-energized by a loss of power to the Essential AC Bus Nr 1, the hydraulic motor control solenoid is also de-energized. The de-energized solenoid opens a shutoff valve and allows hydraulic fluid to drive the motor and the emergency generator.

A three position instrument power switch is located on the pilot's instrument panel. The switch positions are OFF, NORM, and EMER. Under normal conditions the switch is set to the NORM position. In this position the switch provides a ground for the emergency bus power relay. When power is available on the Essential AC Bus Nr 1, the emergency bus power relay is ener-

gized and the hydraulic motor control solenoid is also energized. This prevents the emergency generator from operating. If Essential AC Bus Nr 1 becomes de-energized, the emergency bus power relay will also de-energize and open the hydraulic motor control solenoid. The emergency generator is then automatically activated.

Placing the instrument power switch to the EMER position removes the ground from the emergency power relay, causing the emergency generator to be activated. When the emergency generator is operating, placing the instrument power switch to the OFF position will disconnect the emergency generator from the buses that it is supplying.

When experiencing a loss of normal DC power without a loss of AC power, as indicated by the illumination of the BATTERY light, open the EMER POWER CONTROL circuit breaker located on the DC side of the emergency circuit breaker panel. This will cause the emergency generator to come ON and supply power to the Isolated and Emergency DC Buses and to the Isolated AC Buses.

pilot has only 2 means of turning gen on
emergency gen is 3-phase 400 cps
☆ any time emerg gen is on, NAV bus #1 is lost (goes to dead pole) and you lose autopilot, so if you go to EMER during flight, you lose NAV bus #1
☆ use "emerg" position on instr power switch when emerg gen fails to go on
☆ only time you open emerg power contr circuit breaker is when battery light is on and you still have normal AC power

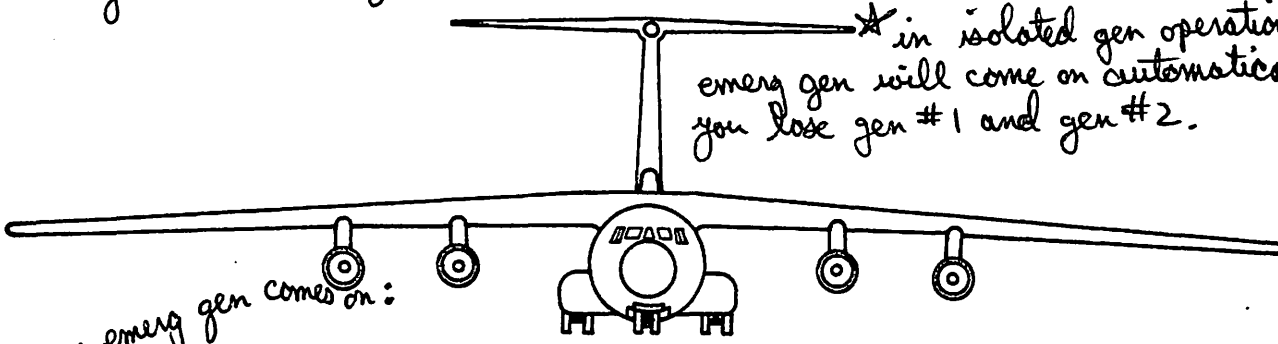

☆ in isolated gen operation, the emerg gen will come on automatically if you lose gen #1 and gen #2.

3 way emerg gen comes on:
lose essent AC bus #1 (automatically)
turn on manually w inst pwr switch
pull emerg pwr contr circuit breaker

if you turn instr power switch OFF and gen comes on line by any of above 3 means, there is no connection of emerg gen to its buses
OFF position is only used during ground start
↳ doesn't shut off gen, but merely disconnects it from buses
if switch is OFF and you are cruising along & lose #1 essential AC bus, no emerg gen will not come on to its buses.
if you go to OFF during flight for some reason, you will lose nothing and notice nothing

Chapter 4

FLIGHT ENGINEER'S ELECTRICAL CONTROL PANEL

The control switches, selectors and indicators necessary to monitor and maintain control of the normal electrical system are grouped on the Flight Engineer's Electrical Control Panel. The operation of each light, switch and meter is summarized in this chapter.

ITEM	DESCRIPTION AND FUNCTION
Voltage and Frequency Meters	These meters and associated selector switches are used to check the voltage and frequency of each phase of any operating generator.
Emergency Power Test Switch	Positioning this switch to TEST causes the emergency generator to be energized but does not connect its output to any buses.
CSD Oil Temperature Gage	The CSD oil temperature gage provides an indication of constant speed drive oil out temperature.
CSD Overheat Light	When ON, the CSD OVERHEAT light indicates an overtemperature condition or loss of oil pressure in its associated constant speed drive unit.
Generator Failure Light	The GEN FAIL light when ON, indicates a mechanical failure in its associated generator.
CSD Disconnect Switch	The guarded CSD disconnect switch is used to disconnect its associated CSD in the event of a CSD or generator malfunction. NOTE: Once disconnected, a CSD cannot be reconnected except on the ground with the engine stopped.
AC Loadmeter	The AC loadmeter provides a continuous indication of the load being supplied by its generator. A reading of 1.0 on the meter corresponds to a 50 KVA load on the generator.
Generator Out Light	The GEN OUT light when ON, indicates that the system protective circuits have operated to de-energize that generator and open its respective generator line contactor.

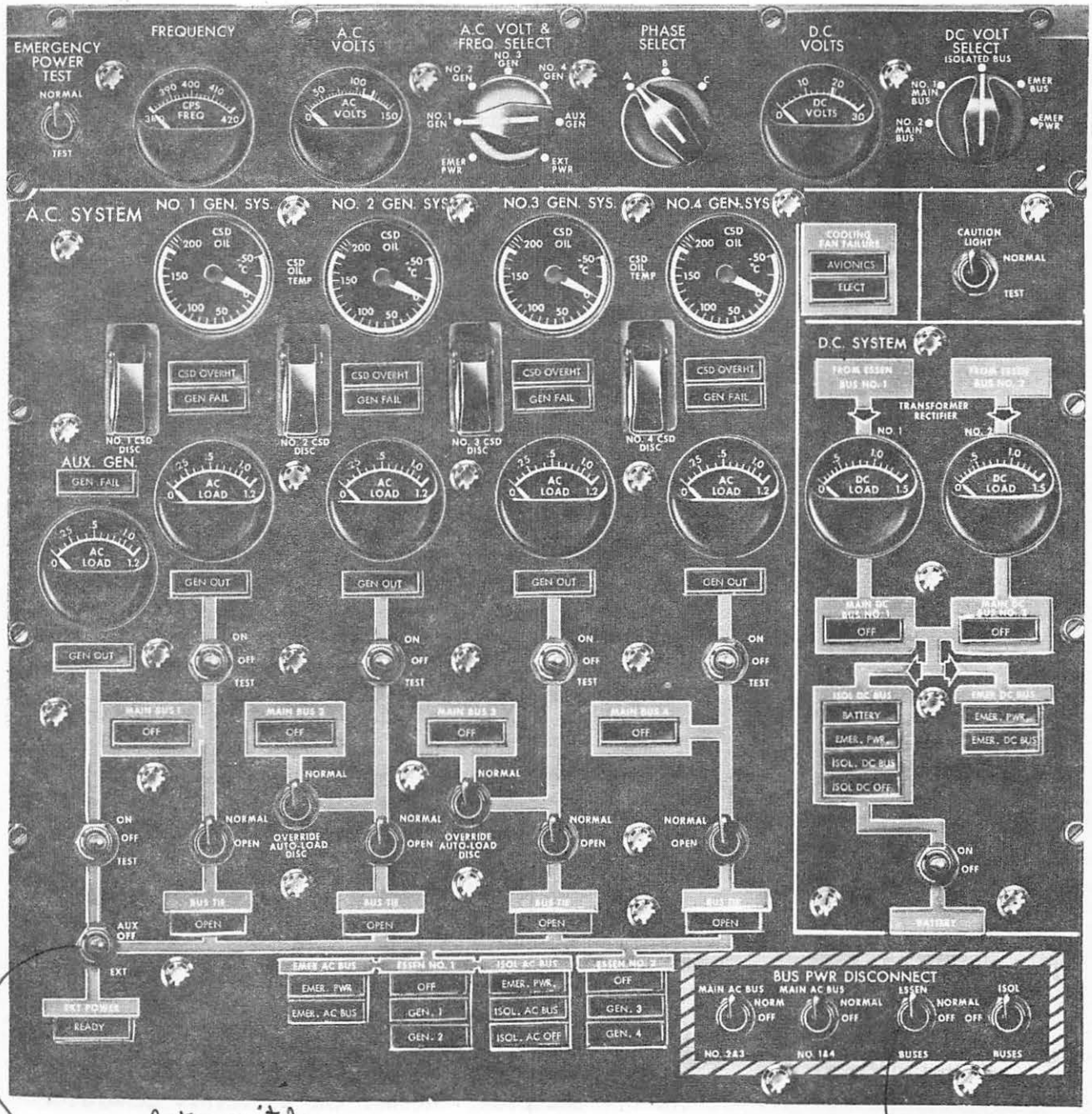

power selector switch

brings on emerg generator

FLIGHT ENGINEER'S ELECTRICAL CONTROL PANEL

ITEM	DESCRIPTION AND FUNCTION
Generator Control Switch	Three position, ON - OFF - TEST switch. The generator is de-energized and its associated generator line contactor is de-energized in the OFF position. Placing the switch in the ON position energizes the generator and its associated generator line contactor. Placing the switch to the TEST position energizes the generator but does not energize its contactor. NOTE: The generator circuit can be reset by turning the generator control switch OFF, except when the generator has been tripped by a differential fault condition.
Main Bus Off Light	The MAIN BUS OFF light when ON, indicates its associated main bus is not energized.
Bus Tie Switch	Two-position, NORMAL - OPEN switch. In the NORMAL position, the bus tie contactor is energized. In the OPEN position, the bus tie contactor is de-energized. NOTE: The bus tie contactor can be reset by turning the bus tie switch to OPEN.
Bus Tie Open Light	The BUS TIE OPEN light when ON, indicates its associated bus tie contactor is open.
Auto-Load Disconnect Switches	The two auto-load disconnect switches have two positions: NORMAL - OVERRIDE. These switches can be used to override the auto-load disconnect feature to power the Main AC Buses Nr 2 and Nr 3 in the event that three generators are lost in flight of if the APU generator is the only source of power for ground operation.
Power Selector Switch	Three-position, AUX - OFF - EXT switch. Positioning the switch to AUX connects the auxiliary generator to the Main AC Tie Bus. Positioning the switch to EXT connects external power to the tie bus. In the OFF position, neither the auxiliary generator nor external power is connected to the tie bus.
External Power Ready Light	When ON, the EXT POWER READY light indicates that external power is of proper phase and minimum voltage.

ITEM	DESCRIPTION AND FUNCTION
Emergency AC Bus Lights	Two indicating lights labeled: EMER PWR and EMER AC BUS indicates the Emergency AC Bus source if other than normal. These lights will be ON if the emergency generator is supplying the Emergency AC Bus.
Essential Bus Nr 1 Lights	The three ESSENTIAL BUS NR 1 lights are labeled: OFF - GEN 1 - GEN 2. The OFF light when ON, indicates that Essential AC Bus Nr 1 is de-energized. The GEN 1 light when ON, indicates that generator Nr 1 is supplying the Essential AC Bus Nr 1. The GEN 2 light when ON, indicates that generator Nr 2 is supplying the Essential AC Bus Nr 1.
Isolated AC Bus Lights	The three ISOLATED AC BUS INDICATING lights are labeled: EMER PWR - ISOL AC BUS - ISOL AC OFF. The EMER PWR light and the ISOL AC BUS light indicates that the emergency generator is supplying the Isolated AC Buses. The ISOL AC OFF light when ON, indicates that the Isolated AC Bus is de-energized.
Essential Bus Nr 2 Lights	The three ESSENTIAL BUS NR 2 lights are labeled: OFF - GEN 3 - GEN 4. These lights serve the same function as do the lights for Essential Bus Nr 1.
Bus Power Disconnect Switches	These switches are used to disconnect generator power from the buses in the event of an inflight emergency. The switches are labeled: Main AC Bus Nr 2 and 3 - Main AC Bus Nr 1 and 4 - Essen Buses - Isol Buses. Each switch has two positions: NORMAL - OFF. NOTE: Operation of the disconnect switches is in a priority sequence of increasing importance of the buses. The Essen Buses disconnect switch will not disconnect the essential buses unless both Main AC Bus disconnect switches have been actuated. The Isol Bus disconnect switch will not disconnect the Isolated Buses unless the Main AC and Essential buses have been disconnected first.
Cooling Fan Warning Lights	There are two COOLING FAN FAILURE lights. One light goes ON and reads AVIONICS if the cooling fans in the electronics equipment underdeck rack malfunctions. The other light goes ON and reads ELECT, if the cooling fans in the electrical equipment underdeck rack malfunctions.

ITEM	DESCRIPTION AND FUNCTION
Caution Light Switch	Positioning this switch to TEST causes all warning lights on the flight engineer's panel to come ON. NOTE: The APU START light is not tested with the caution light switch.
DC Loadmeter	The DC loadmeter provides a continuous indication of the load being supplied by its respective transformer rectifier (T-R) unit. A reading of 1.0 on the meter corresponds to a 200 ampere load on the T-R unit.
Main DC Bus Off Lights	The MAIN DC BUS OFF light when ON indicates its associated bus is not energized.
Isolated DC Bus Lights	The four ISOLATED DC BUS lights are labeled: BATTERY - EMER PWR - ISOL DC BUS - ISOL DC OFF. The BATTERY light when ON indicates the battery is supplying the Isolated DC Buses. The EMER PWR light and the ISOL DC BUS light when ON indicates that the emergency generator is supplying the Isolated DC Buses. The ISOL DC OFF light when ON indicates that the Isolated DC Buses are de-energized.
Emergency DC Bus Lights	The two EMERGENCY DC BUS lights are labeled: EMER PWR - EMER DC BUS. These lights when ON indicate that the emergency generator is supplying the Emergency DC Bus.
Battery Switch	Two-position, ON - OFF switch. In the ON position, the battery relay is closed connecting the battery to the Isolated DC Buses. In the OFF position, the battery relay is OPEN.

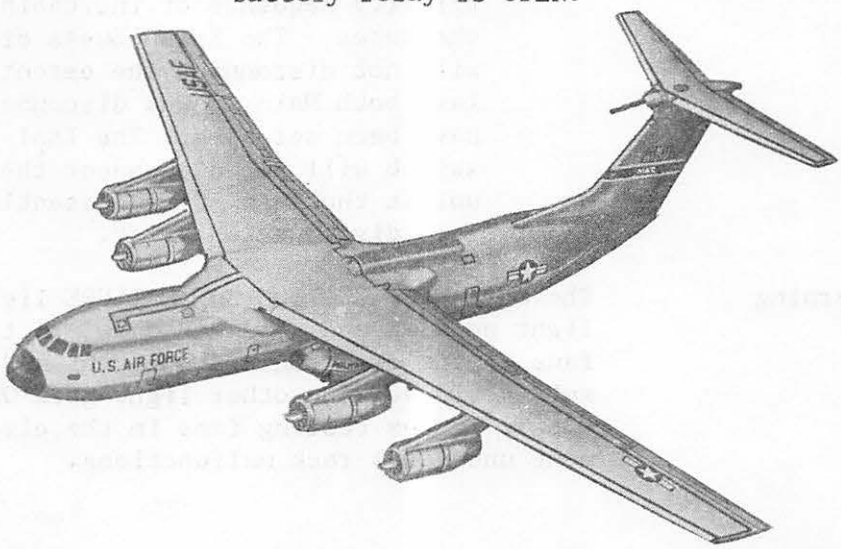

Chapter 5

LIGHTING

Exterior Lights

Landing and Terrain Clearance Lights

A sealed beam landing and terrain clearance light (landing light) is mounted on the bottom of each wing between the engine pylons. Each light is controlled by two switches on the pilot's overhead panel. A switch marked RET - OFF - EXT and a light control switch. Either light may be stopped between its extended or retracted positions by moving its respective RET - OFF - EXT switch to OFF. The left or right light control switch turns its respective light ON or OFF. There is a LANDING LIGHT EXTENDED CAUTION light on the overhead panel that will come ON anytime either landing light is not in the fully retracted position. .53 MACH or 350 KCAS airspeed limitation for landing light

Formation Lights

color: LUNAR WHITE

Nine formation lights are installed on the aircraft; three on each wing and three on the top fuselage aft of the wing. All nine formation lights are controlled by a three-position formation light switch marked DIM, OFF, and BRIGHT.

Navigation Lights

The navigation light system consists of three, two-bulb light assemblies. A red light is on the left wing tip, a green light is on the right wing tip and a white light is on the tail cone. These lights do not flash, but are illuminated continuously. The navigation lights are controlled by a two-position ON and OFF switch.

Anti-Collision Lights 3 lights

The anti-collision lights system consists of three rotating anti-collision lights. One on top of the fuselage in line with the wing, one on the bottom of the fuselage on the same line and one on the upper surface of the horizontal stabilizer. The lights are controlled by a two-position ON and OFF switch.

Taxi Lights

Two taxi lights are mounted on the inside of each main landing gear door. Operation of these four lights are controlled by one ON - OFF switch on the pilot's overhead panel. In addition, there is an interconnect between this switch and the wing leading edge lights, so that when the taxi lights are turned ON the wing leading edge lights are also turned ON. must be turned off after retraction into wheel well

Wing Leading Edge Lights

A light is installed on each side of the fuselage in a position which will illuminate the engine pylons and the leading edge of each wing. A wing leading edge light switch, installed on the overhead panel, allows these lights to be turned ON independently of the taxi lights.

Wheel Well Lights

One wheel well light is installed in each wheel well for illumination of the landing gear down lock. Each light is controlled individually by its respective wheel well light switch. The wheel well light switches are located adjacent to each respective landing gear observation window.

EXTERIOR LIGHTING CONTROL PANELS

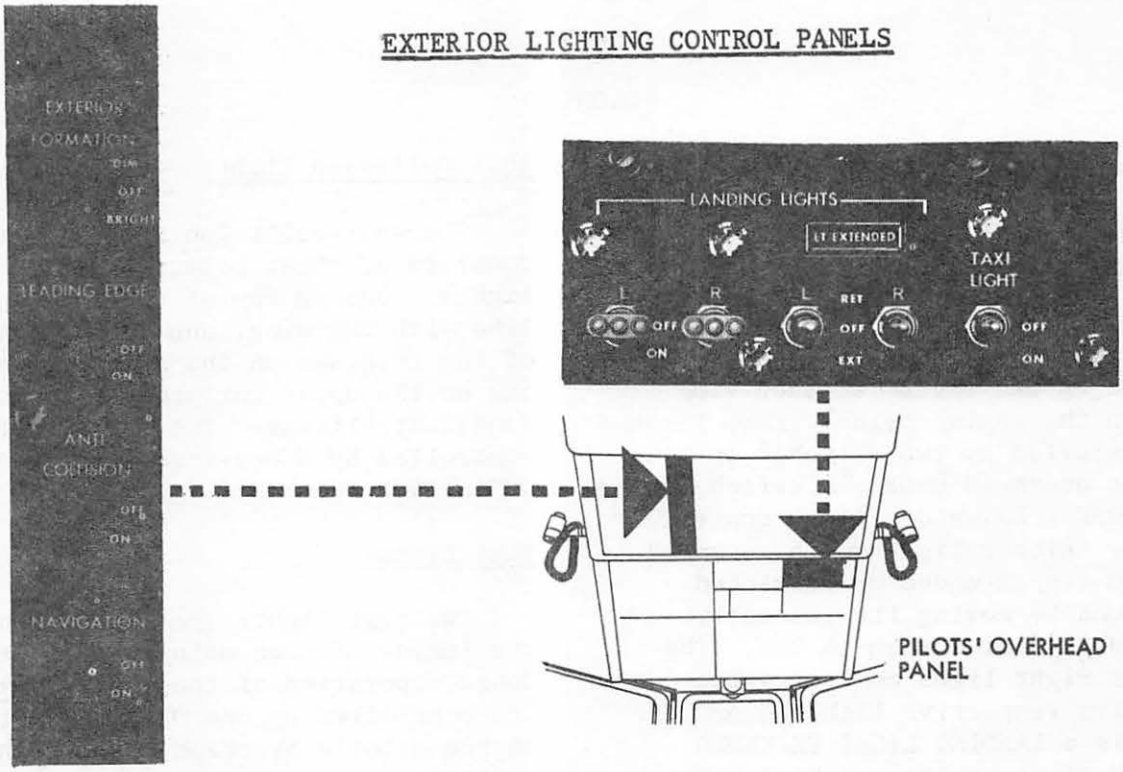

Interior Lights

Interior lighting is achieved by use of many individual lighting systems. Flight station lighting consists of instrument lights, instrument panel lights, and utility lights at each of the crew stations. Lighting is also available in the lavatory, underdeck areas, aft crawlway and vertical stabilizer tunnel. General illumination throughout the flight station and cargo compartment is provided by overhead dome lights.

Emergency Exit Lights

A total of 11 emergency exit lights are installed in the aircraft. One at each emergency exit and at the crew and troop doors. Each emergency exit light contains batteries and relays.

copilot must sign for lights
need 7 to leave home station
need 5 while on the circuit

The emergency exit lights have integral batteries that are charged by aircraft electrical power. A three-position (TEST, ARM and EXTING) EMER EXIT switch on the pilots' overhead panel and two inertia switches, located just aft of the crew entrance door.

The EMER EXIT switch is spring-loaded to the ARM position. With the switch in this position, aircraft electrical power failure or a sudden deceleration causes the lights to illuminate with power from the integral batteries. When power is restored or the inertia switches are reset, the light will be extinguished when the EMER EXIT LIGHTS switch is positioned to EXTING and then released.

Procedure

1. Turn yaw damper system ON.

2. Push yaw damper test button on yaw damper control panel. Both rudder trim meters should deflect to the LEFT and return to neutral.

   After ten seconds the following lights should illuminate:

   a. Pilot's and copilot's YAW DAMPER INOPERATIVE lights on their instrument panels.

   b. YAW DAMPER FAULT light on annunciator panel.

   c. MASTER CAUTION lights on their instrument panels.

   d. MONITOR light on yaw damper control panel.

   Simultaneously, the rudder trim meters should deflect to the RIGHT and then return to neutral.

   After an additional lapse of ten seconds the CHECK/RESET light on the yaw damper control panel should illuminate.

   Illumination of all seven lights after 20 seconds total elapsed time indicates that the system has checked out satisfactorily.

3. Turn yaw damper system OFF and back ON to reset the system. All lights should extinguish.

4. Turn yaw damper system OFF.

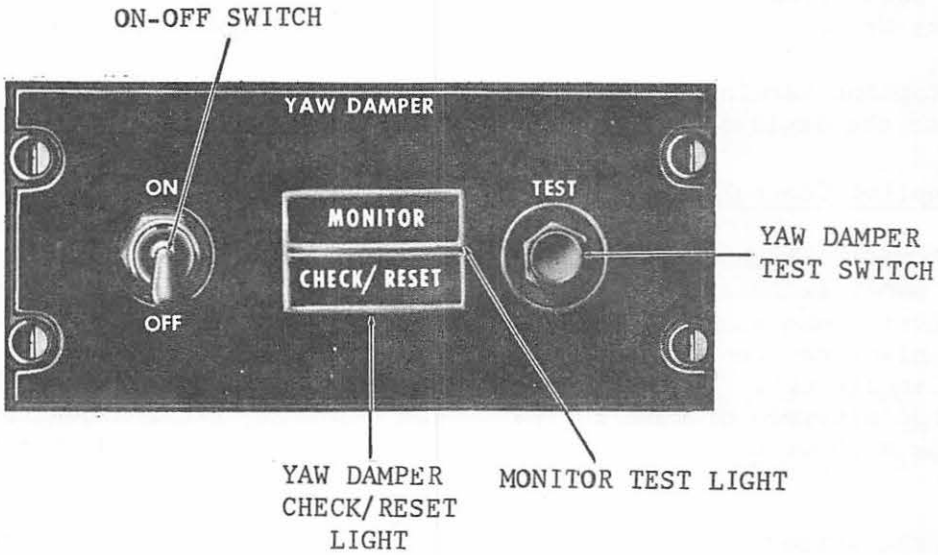

YAW DAMPER CONTROL PANEL

Chapter 9

AUTOPILOT

Introduction

The AFCS automatically controls the aircraft to maintain stabilized attitudes during normal flight. In addition to the basic autopilot function, the system will maintain desired heading using the C-12 Compass or Flight Director System as a heading reference. The AFCS also provides turn coordination, automatic pitch trim, pressure altitude hold, Mach hold and navigation mode selection using TACAN, VOR/ILS, Doppler radar or ASN-24 signals as a flight attitude reference. A control wheel steering (CWS) function is provided on the left-hand control wheel allowing the pilot to command aircraft attitude changes, within autopilot limits, without disengaging the AFCS.

The autopilot uses 115 volt, 400 cycle, single phase AC power from the Navigation AC Bus Nr 1. It also uses 28 volt DC power from the Main DC Avionics Bus Nr 1.

The autopilot warning circuits are connected to the Isolated Avionics DC Bus.

Autopilot Control Panels

The Automatic Flight Control System (AFCS) panel is located on the pilots' center console. With this panel, the pilot can control the desired mode engagement. In addition, he can change altitude or make coordinated turns without disengaging the autopilot.

All of the switches on the AFCS control panel with the exception of the MACH INC-MACH DEC are held to their engaged position by a holding solenoid.

An interlock system prevents engagement or releases the switch, if an improper engagement setup is selected by the pilot.

An AFCS trim indicator panel is located on the pilots' center instrument panel. This panel has three indicators and four indicator lights.

AFCS Control Panel Procedures

The AUTOPILOT switch on this panel is used to engage the autopilot. It can be used to disengage the autopilot. If the autopilot disconnect switch on either control wheel is depressed, the autopilot will disengage and the AUTOPILOT switch will return to the OFF position. Remember that the yaw damper system does not disengage when the autopilot is disengaged.

The NAV SEL-LAT OFF switch allows the navigation aid selected on the Flight Director System Navigation Panel (co-pilot's panel) to furnish signals to the autopilot. Moving the switch to NAV SEL engages the navigation aid. Move the switch to neutral, if the navigation aid is to be disengaged. The switch will be returned to neutral automatically, if the TURN controller knob is moved out of detent or the autopilot is disengaged.

Aileron control only is disengaged by moving the NAV SEL-LAT OFF switch to LAT OFF. Aileron control by the autopilot is restored when the switch is returned to neutral.

The ALT HLD-PITCH OFF switch allows the pilot to disengage pitch control only by placing it to PITCH OFF. The ALT HLD position allows the autopilot to keep the aircraft at the

pressure altitude existing at the time the switch is engaged to this position. Altitude hold can be disengaged by placing this switch to neutral (center).

Next to the ALT HLD-PITCH OFF switch is the PITCH controller. The PITCH controller can be rotated towards UP or DOWN to produce the desired reaction. Maximum pitch angle is 30 degrees. The PITCH controller is inoperative under the following conditions: ALT HOLD engaged, PITCH OFF engaged, G/S (glide slope) engaged, or MACH HLD EL (Mach hold-elevator) engaged.

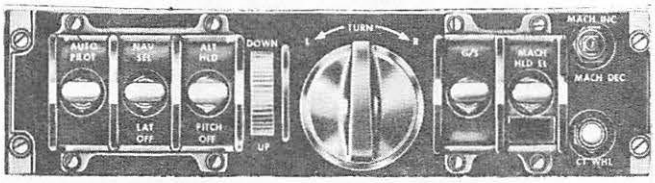

AUTOPILOT CONTROL PANEL

Then comes the TURN controller which is used to make coordinated turns with the autopilot. Turn it "L" or "R" as desired. Maximum bank angle is 38 degrees. Whenever it is used, the compass heading or navigation aid being used is automatically disengaged. When the TURN controller is returned to neutral (detent) position, the compass is automatically reengaged. However, the navigation aid will only be reengaged, if the NAV SEL-LAT OFF switch is placed to NAV SEL.

The G/S (glide slope) switch is used with the navigation aid function of the autopilot. VOR-ILS-3 must be selected before the G/S switch will engage. When in G/S, the G/S ARM light will come ON if the aircraft is below the glide slope. The glide slope function engages when the error falls to 1/20 of a degree. The G/S ARM light goes OUT at this time. Altitude hold or Mach hold, if ON, will disengage.

The MACH HLD EL engages the Mach hold-elevator system when in MACH HLD EL. Under this condition, the existing Mach speed is held by the autopilot. Mach hold speeds can be changed by moving the MACH INC-MACH DEC switch as desired. The switch is spring loaded to neutral. MACH HLD EL is disengaged when control wheel steering (CWS), altitude hold, or glide slope is used.

The CT WHL OFF switch disengages control wheel steering (CWS) when in the OFF (center) position.

AFCS Trim Indicator Panel Procedure

The three trim indicators, one for each control surface, allow visual monitoring of the AFCS. Anytime a correction is applied to the control surface, the indicator bar deflects from the index mark.

The A/P OFF light comes ON to indicate that the autopilot has been disengaged by the interlock system, or the AUTOPILOT switch on the AFCS control panel is turned OFF. The light may be turned OUT by depressing either of the control wheel switches.

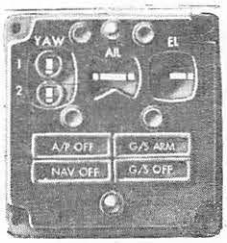

AFCS SERVO-EFFORT INDICATOR

The NAV OFF light, when ON, indicates that the navigation aid desired has not been selected on the navigation selector panel, prior to setting the switch to NAV SEL. It can be turned OFF by moving the NAV SEL switch to neutral or by moving a controller out of center.

The G/S ARM light comes ON, when the G/S switch is placed to G/S. It goes out as the glide slope engagement takes place. The G/S OFF light comes ON, if the glide slope engagement is lost and the switch is left in G/S.

Control Wheel Steering

Control wheel steering (CWS) is incorporated into the left hand control wheel only. It allows aircraft attitude correction without disengaging the autopilot.

Control Wheel Steering (CWS) Mode is selected by placing the CONTROL WHEEL STEERING selector switch, on the AFCS control panel, to the CT WHL position.

Wheel pressure of more than 2.5 pounds will activate the system. The bank or pitch angle will change up to the limits of the engaged operating mode.

If CWS force is released and bank angle is greater than three degrees, the aircraft will stay at the existing bank angle.

If CWS force is released, but bank angle is less than three degrees, the aircraft will return to level flight.

In pitch, if the CWS force is released, the aircraft will remain at the pitch angle existing at the time of release.

CWS action is present if: AUTOPILOT switch is ON, TURN controller is in detent, and CT WHL switch is ON.

Roll CWS is inactivated when NAV SEL-LAT OFF switch is in LAT OFF.

Pitch CWS is inactivated when ALT HLD-PITCH OFF switch is in either of these positions.

CWS is turned ON or OFF by means of the CT WHL switch.

Yaw Damper Panel

The yaw damper should be turned ON regardless if the autopilot is to be used or not. For further details on the yaw damper system, refer to Chapter 2.

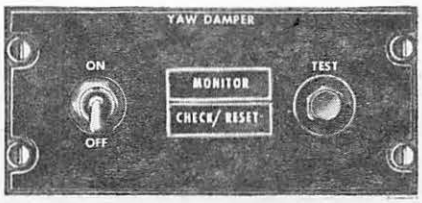

YAW DAMPER CONTROL PANEL

Autopilot Mode Selection

The chart on Page 9-15 vividly shows the autopilot mode priority and mode compatibility. The term compatibility is used to indicate that two different modes can be selected at the same time. For example, altitude hold and roll CWS can be selected at the same time.

Some modes have priority over other modes. If a higher priority mode is selected, the lower priority mode will drop out of the control circuit. The interlock system prevents the pilot from selecting a low priority mode, when he has already selected a higher priority mode.

MODE SELECTION ↓ / →	NO. 1 C-12 COMPASS HDG HLD	TURN KNOB	ROLL CWS	NAV SEL: FLT DIR HDG SEL	NAV SEL: FLT DIR HDG HLD	NAV SEL: VOR-TAC	NAV SEL: ILS	NAV SEL: ASN-24, 35	LAT OFF	PITCH KNOB	PITCH CWS	ALT HOLD	MACH HOLD	GLIDESLOPE
TURN KNOB	X	—	X	X	X	X	X	X		0	0	0	0	X
ROLL CWS	X	Y	—	Z	Z	Z	Z	Z		0	0	0	0	0
NAV SEL: FLT DIR HDG SEL		Y	Z	—		1	1	1		0	0	0	0	0
NAV SEL: FLT DIR HDG HLD		Y	Z		—					0	0	0	0	0
NAV SEL: VOR-TAC	1	Y	Z	1		—				0	0	0	0	
NAV SEL: ILS	1	Y	Z	1			—			0	0	0	0	0
NAV SEL: ASN-24, 35	1	Y	Z	1				—		0	0	0	0	
LAT OFF									—	0	0	0	0	0
PITCH KNOB	0	0	0	0	0	0	0	0	0	—	Y	Y	Y	Y
PITCH CWS	0	0	0	0	0	0	0	0	0	X	—	Y	X	Z
ALT HLD	0	0	0	0	0	0	0	0	0	X	X	—	3	4
MACH HLD	0	0	0	0	0	0	0	0	0	X	Y	3	—	4
GLIDESLOPE	0	Y	0	0	0		0		0	X	Z	4	4	—
PITCH OFF	0	0	0	0	0	0	0	0	2					

CODE

- **0** = COMPATIBLE (BOTH CAN BE SELECTED SIMULTANEOUSLY
- ▨ = NOT COMPATIBLE
- **X** = MODE ON LEFT HAS PRIORITY
- **Y** = MODE ABOVE HAS PRIORITY
- **Z** = CWS MODE INOPERATIVE AFTER NAV SEL OR GLIDESLOPE MODES ARE INTERCEPTED

NOTE

1. SYSTEM WILL REMAIN ON HDG HLD OR HDG SEL UNTIL BEAM THRESHOLD IS REACHED.
2. IF BOTH ARE CHOSEN, AUTOPILOT DISENGAGES.
3. LAST ONE CHOSEN HAS PRIORITY.
4. AIRCRAFT REMAINS IN "ALT HLD" OR "MACH HLD" UNTIL GLIDESLOPE BEAM IS REACHED.

AUTOPILOT MODE SELECTION

Autopilot Operational Modes

Introduction

The autopilot modes are selected by switches on the AFCS control panel and yaw damper panel. Selection of navigation aids used with the autopilot are made on the copilot's navigation selector panel.

Yaw Damper Mode

This is a primary mode. Turned on by placing the yaw damper switch (yaw damper panel) to ON.

Heading Hold Mode

This is a primary mode. In this mode, the autopilot uses the Nr 2 C-12 Compass as the heading reference. This mode is selected when the AUTOPILOT switch (AFCS panel) is turned ON. It is disconnected, as long as CWS or the TURN controller is used.

Altitude Hold Mode

This mode holds the aircraft at the pressure altitude selected. Use the ALT HLD switch (AFCS panel). Heading Hold Mode is retained. Altitude Hold Mode drops out if MACH HLD EL switch is selected, or if the aircraft intercepts the glide slope. No pitch CWS when this mode is used.

Mach Hold Mode

Controls the aircraft at the Mach speed existing at the time of engagement. The Heading Hold Mode is retained. Other heading modes may be selected. Use MACH HLD EL switch (AFCS panel). Mach reference speed can be increased/decreased slightly (.03 Mach) by use of MACH INC-MACH DEC switch (AFCS panel). Mode drops out, if ALT HLD switch is used, or the aircraft intercepts the glide slope. CWS pitch control has priority over this mode.

Pitch Off Mode

Turns off pitch control only. Rest of autopilot still engaged. Use the PITCH OFF position of the ALT HLD-PITCH OFF switch (AFCS panel). The pilot will have to control the pitch axis manually in this condition.

Lateral Off Mode

Turns off lateral steering only. Rest of autopilot still engaged. Use the LAT OFF position of the NAV SEL-LAT OFF switch (AFCS panel). The pilot manually controls lateral steering in this mode.

Control Wheel Steering (CWS) Mode

Control Wheel Steering (CWS) may be used to maneuver the aircraft while operating on Heading Hold Mode or Navigation Modes until beam engagement takes place.

Roll CWS may also be used in the Nav Sel/Hdg Hld Modes, but the aircraft will roll to level and hold heading upon release of force at any bank angle in this condition.

Navigation Select Operation

Basic autopilot functions may be supplemented by signals from the navigation systems installed on the C-141. Selection of the desired aid is made on the copilot's navigation selector panel.

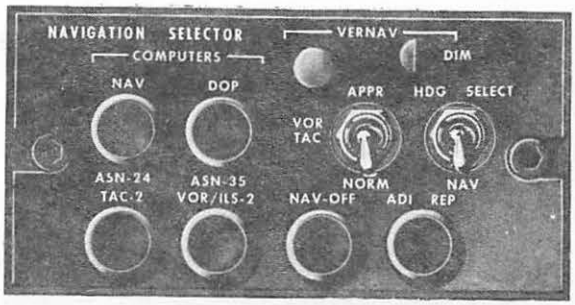

COPILOT'S NAVIGATION SELECTOR PANEL

Heading Select Mode

In this mode, the autopilot controls the aircraft on the heading set on the copilot's HSI. Set the HDG SELECT-NAV switch on the navigation selector panel to HDG SEL and the NAV SEL-LAT OFF switch (AFCS panel) to NAV SEL.

VOR-ILS Mode

This mode is placed into service by depressing the VOR-ILS button on the copilot's navigation selector panel, and placing the HDG SELECT-NAV switch to NAV. After these two have been set, set NAV SEL-LAT OFF switch (AFCS panel) to NAV SEL.

Turn aircraft to desired intercept heading with CWS or HSI. When intercept heading is established, the autopilot will maintain Heading Hold Mode until course deviation is less than full scale, and then the navigation aid takes over control.

To use ILS, turn ON a localizer station and position the G/S (AFCS panel) switch to ON. During the glide slope approach, the maximum pitch and bank correction angles are limited to 7 1/2 degrees, one minute after glide slope intercept.

TACAN Select Mode

For this mode use the TAC-2 button on the copilot's navigation selector panel. Next set the HDG SELECT-NAV switch to NAV. On the AFCS panel, the NAV SEL-LAT OFF switch is set to NAV-SEL.

Turn the aircraft with the CWS or HSI to intercept the desired TACAN radial. The autopilot will then receive course signals when the TACAN beam coupler is energized.

ASN-24 Select Mode
ASN-35 Select Mode

Select the desired mode (ASN-24 or ASN-35) on the copilot's navigation selector panel. The HDG SELECT-NAV switch is set to NAV. Place the NAV SEL-LAT OFF switch (AFCS panel) to NAV SEL.

Intercept the ASN-24 or ASN-35 bearing with the CWS or HSI. When the beam coupler is energized, course corrections will come from the ASN-24 or the Doppler System as desired.

Operational Procedures

1. Check that:

   Nr 2 C-12 Compass is operating.
   Nr 2 CADC is operating.
   Yaw Damper is ON.
   Autopilot power is available.

2. Center the TURN controller into the DETENT position.

3. Trim the aircraft into "hands-off" flight condition.

   NOTE: If the trim indicators (trim indicator panel) indicate a constant correction signal later on during the flight, the pilot should disengage the autopilot, trim again to a "hands-off" condition, and reengage the autopilot.

4. Set AUTOPILOT switch on AFCS control panel to AUTOPILOT.

5. Select further switch settings as desired.

6. To turn the autopilot OFF, use the disconnect buttons on the control wheels or turn off the AUTOPILOT switch on the AFCS panel.

C-141 ENGINES

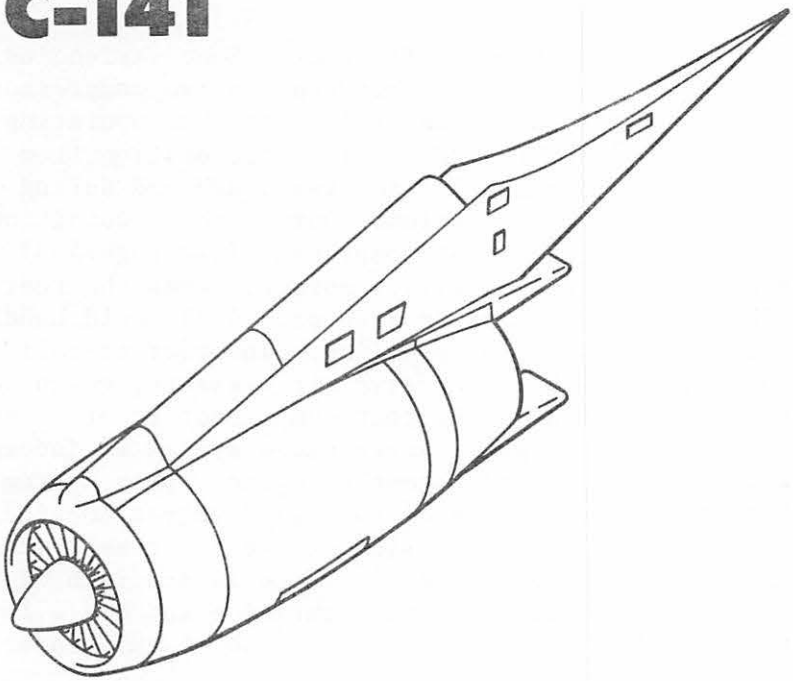

Section 4

TABLE OF CONTENTS

Chapter 1

ENGINE GENERAL

Design Features

The TF-33-P-7 power plant has; a sixteen stage, axial flow split compressor; an eight-can can-annular combustion chamber; and a four stage, axial flow twin spool type turbine. There are two accessory cases on the engine.

Engine Sections

The engine is divided into five operating sections: Compressor (including the fan section), diffuser section, combustion section, turbine section, and the accessory drive sections.

Compressor Section

The compressor section supplies air for combustion, internal engine cooling, and operation of the aircraft pneumatic systems.

The engine has a sixteen-stage, axial-flow split compressor. The air in an axial-flow compressor generally flows straight to the rear. Rotation movement of the air mass is kept to a minimum. Air entering the compressor normally continues through the engine without rotating more than 180 degrees.

The axial-flow compressor has alternate rows of rotating blades and stationary vanes. The rotating (rotor) blades are attached to the compressor shaft. The stationary (stator) vanes are attached to the compressor housing. Each rotor blade compresses and pushes the air through the stator vanes. The stator further compresses the air and directs it to the next rotor blade. The combination of one stator vane and one rotor blade is one stage of compression.

The front compressor (N_1) consists of nine stages of compression. The first two stages of the front compressor have larger blades than the other stages. These two make up the fan.

The fan is part of the relatively slow-turning front compressor, which allows the fan blades to rotate at the most efficient speed. The outer portion of the fan air is ducted around the engine and exits in a duct concentrically around the engine nozzle.

The rear compressor (N_2) consists of 7 stages of compression. It is a high-speed compressor.

Compressor Surge Bleed System

The stages of the twin-spool compressor assembly are matched to perform at optimum efficiency. Some variencies in airflow between the two compressor assemblies will exist when operating at low RPM during acceleration from standstill to steady RPM and during deceleration. During these conditions the front compressor (see page 4-3) would deliver more air than the rear compressor (see page 4-3) could handle without stalling. In order to relieve this excessive air pressure, which would cause the rear compressor to stall and surge, a surge bleed system is incorporated into the engine. This system consists of two bleed valves located on either side of the compressor intermediate case. There is a 6 inch diameter valve on the right side and 4-3/4 inch valve on the left side of this case.

These valves are controlled by differential pressure senses between the compressor inlet and the ninth stage, and will relieve 12th stage pressure when actuated to the open position. The actuation pressure for the system is obtained from the 16th stage air. The control for the surge bleed system is designed so that the 4-3/4 inch valve will remain closed during all operating conditions except during rapid deceleration, when it will open to assist the 6-inch valve to relieve the 12th stage pressure. The 6-inch valve is open when the engine is not operating and remains open until N_2 compressor rpm reaches approximately 80% rpm, when it closes. Above 80% N_2 rpm, this valve will open when necessary to relieve a compressor stall.

During normal, on-speed operation, both bleed valves remain closed until N_2 rpm is reduced below 80% rpm, when the 6-inch valve again opens. The 12th stage air, when relieved by either or both of the two bleed valves, is ported into the fan duct.

Diffuser Section

The diffuser section, which is secured to the rear flange of the compressor rear case, adapts the air for entry into the combustion chambers. The diffuser section also provides ports for tapping off bleed air for use in the bleed air system and in the engine systems.

Combustion Section

The combustion section is composed of an inner combustion liner, a split outer combustion case, and eight burner cans arranged in an annular pattern inside the outer combustion case. The burner cans are located between the inner combustion liner and outer combustion case. They are numbered one through eight in a clockwise direction as viewed from the rear of the engine.

The burner cans are interconnected by means of crossover tubes. Spark-igniters are installed in the Nr 4 and 5 cans. The crossover tubes carry the flame to the other cans.

A fuel drain is located at the bottom rear of the outer combustion chamber case.

Turbine Section

The turbine section contains a four-stage turbine having a set of nozzle guide vanes, located ahead of each turbine rotor stage; a turbine nozzle case; and a turbine exhaust case. The first stage of rotor is the high speed turbine, which drives the N_2 high-pressure compressor. The second, third and fourth stages of the rotor are the low-speed turbine, which drives the N_1 low-pressure compressor.

Accessory Sections

The main accessory section gearbox is mounted beneath and secured to the diffuser section. The gearbox is driven by the N_2 compressor through a gear train. Mounted to the accessory section are the:

- Main oil pump
- Engine fuel control
- Engine driven fuel pump
- CSD
- Starter
- Aircraft hydraulic pump
- Rotary breather
- Breather pressurizing valve
- N_2 tachometer generator
- Oil filter
- Thrust reverser hydraulic pump

The front accessory section is located at the front of the N_1 compressor and is covered by the nose dome. The N_1 tachometer generator and a scavenge pump for the front bearing are mounted on the front accessory section.

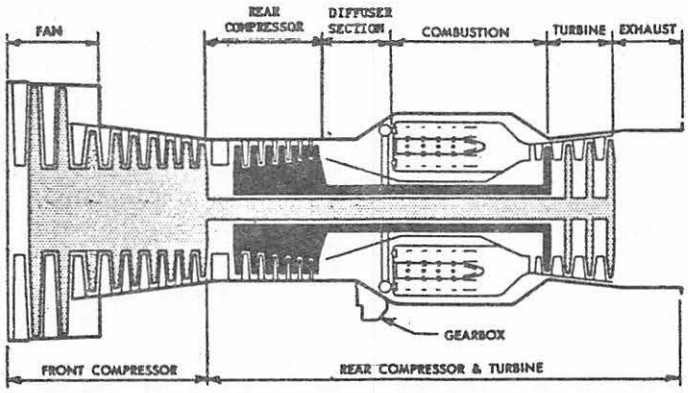

ENGINE SECTIONS

Chapter 2

ENGINE BLEED SYSTEM

Introduction

The nacelle anti-icing system and engine anti-icing system for each engine are inter-related. The pneumatic portions of the two systems are separate, but both systems are controlled manually by the same switch for that engine on the pilot's overhead panel.

In addition, both systems for all engines are controlled by the ice detector system, when the ice detector switch on the pilot's overhead panel is placed to the AUTO position.

Nacelle Anti-Icing System

Each nacelle is protected from ice formation by a nacelle anti-icing system.

The bleed air supply for the nacelle anti-icing system is extracted from a port on the upper right side of the engine diffuser section. The air flows from the port through a venturi to a shutoff-regulator valve. The venturi limits the maximum amount of flow that can be extracted from the port.

The shutoff-regulator valve is solenoid controlled but uses bleed air for operation. The solenoid is controlled by the engine anti-ice switch on the pilot's overhead panel. There are four switches, one for each engine. The solenoid is also controlled automatically by the ice detector system.

The shutoff-regulator valve assembly consists of a poppet valve, a solenoid valve, a pressure regulator, and a switch.

The poppet valve is spring-loaded to the closed position. Sixteenth-stage air, taken from the outer diameter of the diffuser, is used to override the spring tension and open the valve allowing air flow to the inlet of the nacelle for anti-icing, when the solenoid valve is energized open. The pressure regulator assembly regulates the position of the poppet valve, maintaining a downstream pressure of 16 psi.

The switch assembly is actuated by the poppet valve. When the poppet valve opens, the switch completes a circuit which illuminates its respective ANTI-ICE ON light. The light goes ON when the regulator-shutoff valves in the engine and nacelle anti-icing systems are open. This light is located on the pilot's overhead panel.

After the air passes through the shutoff-regulator assembly, it flows forward to the nacelle lip. After anti-icing the nacelle lip, the air mixes with the cold air entering the engine inlet.

Engine Anti-Icing System

The engine anti-icing air is extracted from the top left side of the diffuser section and is directed forward through a tube to the compressor fan case. When the air reaches the fan case, the air flow divides into right and left manifolds which conduct it into an outer annulus. From this point, a series of holes, located around the circumference of the outer annulus direct the air into the outer ends of the inlet guide vanes. The air flow through the guide vanes is collected at an inner annulus. From this inner annulus the air flows through holes in the front bearing support housing into the nose dome. After anti-icing the dome, the air is discharged through an annular slot in the dome and flows back into the engine air inlet.

Engine Anti-Icing Valve

Control of the air flow is by means of an airflow regulator and a motor operated shutoff valve. These two units are located in the air line just before it separates for the right and left manifolds. The purpose of the regulator valve is to provide sufficient air to control icing with a minimum increase in inlet air temperature, to avoid damaging the inlet guide vanes. The regulator has an internal valve which is controlled by a bimetallic spring. The regulator is wide open when the engine diffuser air is cool and closes as the temperature of the air increases. The regulator valve never closes completely.

After the regulator valve, the air flows to the shutoff valve. The shutoff valve is a motor operated butterfly valve. Each engine anti-icing shutoff valve is controlled by its respective engine anti-ice switch located on the pilot's overhead panel.

Nacelle Preheat System

The nacelle preheat system receives air from the aircraft bleed air system through a nacelle preheat valve located in each nacelle. The air is used to heat the engine and accessories so the engine can be started more readily.

When the nacelle is to be heated, the bleed air shutoff valve for that nacelle must be open to allow air flow from the bleed air manifold to the nacelle preheat valve. Four nacelle preheat switches located on the flight engineer's panel control the nacelle preheat valves.

Air for preheating may be supplied by the auxiliary power unit (APU), external air supply, or from any engine which is operating.

Engine Cooling

Zone I cooling is provided mainly to protect the nacelle structure from heat damage. To accomplish cooling of Zone I, air is bled from both fan ducts through two pneumatically actuated valves into two perforated tubes. The air passes through the holes in the tubes into Zone I. The air flows down around the hot section and out the two louvers located on the bottom of the nacelle.

The pneumatically actuated valves are controlled automatically by a bellows and 12th stage bleed air. The system operates below 20,000 feet.

Zone II cooling is provided by allowing air to enter the nacelle through louvers located on the bottom of the nacelle. The air flows upward around the accessories and the cold section of the engine. The cooling air is exhausted through ejector ducts in the pylon fairing.

Located in front of each ejector duct are four ejector nozzles. These ejector nozzles direct streams of high-pressure bleed air into the ejector ducts which force cooling air in the nacelle to be ejected at a faster rate. This in turn causes more cooling air to enter the nacelle.

Controlling the high pressure bleed air flow is a pressure switch and a solenoid operated valve which react to allow bleed air flow below 19,000 feet and to shut off the bleed air flow when the aircraft climbs above 19,000 feet.

Located in each ejector duct is a butterfly valve. The butterfly valves are connected through common linkage to an actuator. The actuator is motor-driven and is controlled by the fire

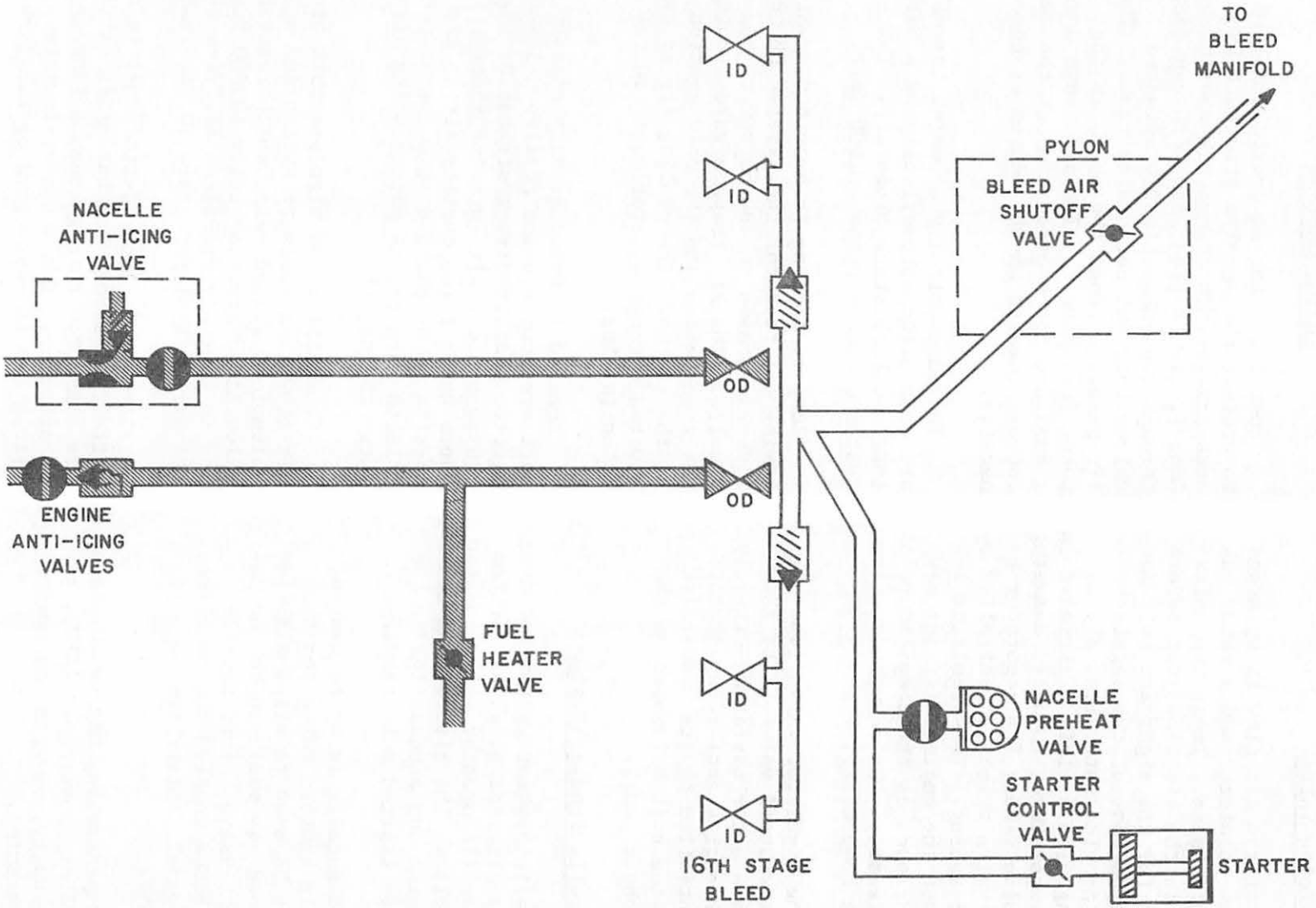

ENGINE BLEED SYSTEMS SCHEMATIC

emergency handle. The butterfly valves, normally, are in the open position. In the event of fire, the emergency handle is pulled, energizing the actuator, and closing the butterfly valves. Should the aircraft be below 19,000 feet altitude, the ejector nozzles will also be shut off.

Fan Duct Seals

Fan duct seals are installed on each end of the aft cowl panels. These seals have two compartments which are inflated by engine bleed air during engine operation. The two compartments of the seal are called the high-pressure chamber and the low-pressure chamber. When the seals are inflated, they fill the void between the aft cowl panels and their adjoining nacelle sections. This prevents fan exhaust air from escaping overboard before it reaches the exhaust nozzle. In the event of a rupture of either chamber, a positive seal is still maintained by the remaining chamber.

Fan Duct Seal System

Air pressure in the fan duct seals is regulated by a pneumatic regulating valve located on the rear flange of the diffuser section. The valve maintains 24 psi in the high-pressure chamber and 21 psi in the low-pressure chamber. A check valve is installed in the system to prevent reverse flow from the seals. The check valve operates as a relief valve to vent air overboard when pressure in either chamber exceeds the specified level.

Before opening the aft cowl doors, the fan duct seals must be deflated to prevent damage to the seals. For depressurizing, a manual override lever is provided to override the check valves and allow air in the seals to bleed overboard. The manual lever is accessible through the small access door on the bottom of the aft cowl panel.

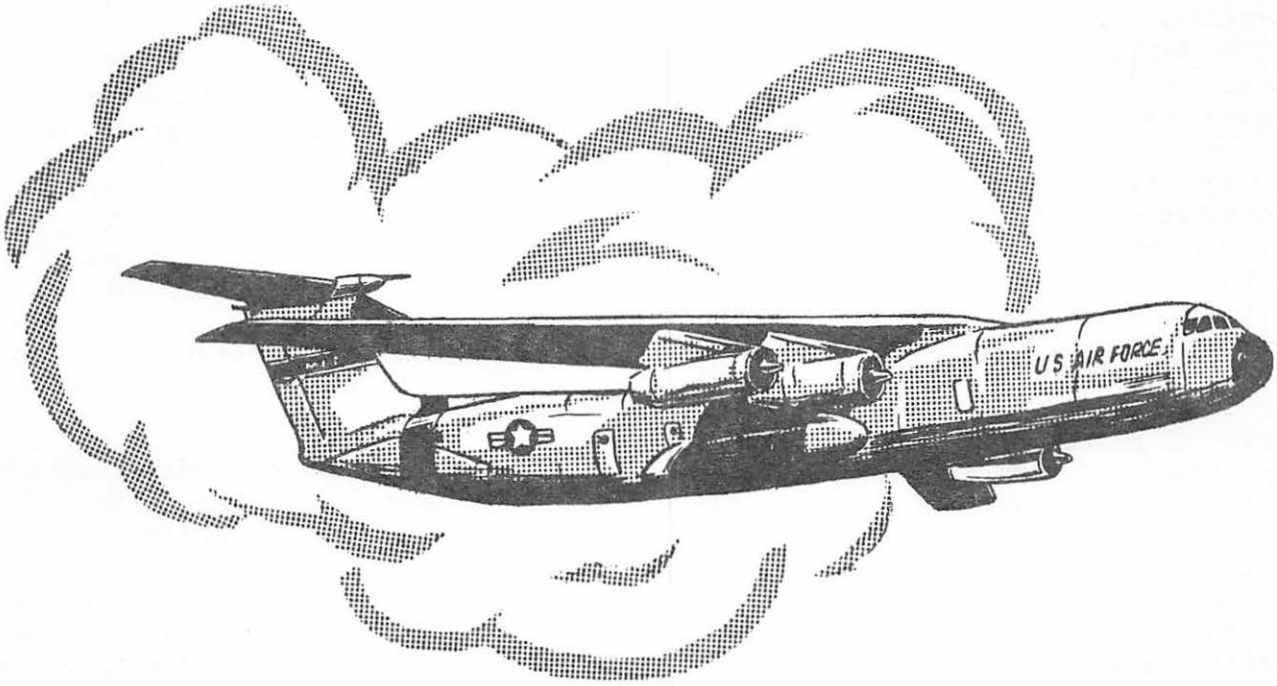

Chapter 3

STARTER AND IGNITION SYSTEMS

Each engine is equipped with a self contained starting system consisting of the following components: Pneumatic starter, starter control valve, pneumatic ducting, and the starting and ignition control system.

The pneumatic power starter starts the engine while the aircraft is on the ground. The starter control valve controls the flow of air to the starter and limits the air pressure to a predetermined maximum value. The starter, when supplied with pneumatic and electrical power, provides rotational torque to the N_2 compressor until it reaches 35 to 45 percent speed. At this time a cut-out switch, located in the starter, opens the ground for the starter control valve, which in turn, disengages the starter from N_2 compressor.

Electrical power for starting the engine may be supplied from an external ground source, APU, Battery or any operating engine. Pneumatic power may be supplied to the starter from an external ground source, the APU, or any operating engine.

The starter control system provides automatic operation of the starter and starter control valve once the starter button has been depressed. The starter button is a push-pull type switch. The switch is manually depressed to energize the starter control valve open. The switch is automatically held in the DEPRESSED position by a holding coil in the switch. The holding coil circuit is completed through the starter cut-out switch. The fuel and start ignition switch completes a circuit necessary for accomplishing an engine start but has no direct control over the engine starter or starter control valve.

The engine ignition system consists of an ignition exciter, two high tension ignition leads and two sparkignitors. The sparkignitors are located in combustion chambers four and five.

The ignition exciter unit contains two separate systems. One system is a twenty Joule intermittent system used during all engine starts. The twenty Joule systems are controlled by the fuel and start ignition switches and starter buttons on the pilot's overhead panel. The other system is a four Joule continuous ignition system which can be controlled from the pilot's overhead panel by a switch marked continuous ignition through the run position of the four fuel and start ignition switch.

When the starter button has been depressed, N_2 compressor should start to rotate. There should be an indication of oil pressure at the flight engineer's panel and N_1 compressor should also start to rotate. At 15 percent of N_2 the fuel and start ignition switch is moved from STOP to the RUN position. This will supply fuel and ignition to the engine. Engine lightoff should occur and the engine will accelerate to the idle speed of 54 to 58 percent N_2. As the engine accelerates between 35 and 45 percent, the starter cut-out switch will actuate, causing the starter button to pop out, the starter control ol valve to close and the 20 Joule ignition to become deenergized.

The fuel and start ignition switch has three positions: STOP - RUN - AIR START. In STOP, fuel and ignition is cut off to the engine. The RUN position is used for normal engine operation. The AIR START position is used to allow the twenty Joule ignition system to bypass the starter button. It must be held in the AIR START position.

Chapter 8

YAW DAMPER SYSTEM

Introduction

The Automatic Flight Control System (AFCS) includes a yaw damper system. This yaw damper system operates independently of the autopilot portion of the AFCS and is electrically isolated from the autopilot.

This yaw damper system controls the rudder in all modes of operation.

Theory of Operation

Yaw damper engagement means that the rudder control surface is being positioned by the rudder servos of the AFCS. This engagement is accomplished by placing the yaw damper switch on the yaw damper panel to ON. The rudder servos have automatically assumed the position of the aircraft prior to this action, resulting in a smooth takeover by the yaw damper.

If the autopilot is not operating, yaw damper rate gyros Nr 1, Nr 2, and Nr 3 sense any deviation of the aircraft in the yaw axis. Immediately, a signal is generated proportional to the yaw, sent to the yaw damper computer, amplified, and thence to the servos to dampen out the deviation.

If the autopilot is operating, a portion of the signals created by the autopilot vertical gyro and the pitch and roll rate gyro (computed in the aileron computer) is sent to the yaw damper computer, through the roll engage relay, which modifies the yaw damper computer signals for coordinated turns.

Operation

The yaw damper system uses 115 volt, 400 cycle, single phase AC power from the Emergency AC Bus through three yaw damper circuit breakers on the emergency circuit breaker panel. In addition, the yaw damper uses 28 volt DC power from the Emergency DC Bus. There are two DC yaw damper circuit breakers on the emergency power circuit breaker panel.

The yaw damper control panel is located on the pilots' center console. To turn on the yaw damper, place the OFF-ON switch to ON.

Warning System

If one of the yaw rate gyros or servos malfunctions, the monitor system will turn ON the YAW DAMPER FAULT light located on the pilot's annunciator panel.

If more than one yaw rate gyro or servo malfunction is detected by the monitor circuit, it turns ON the YAW DAMPER INOPERATIVE lights located on the pilot's and copilot's instrument panels.

Testing

The yaw damper test circuit is wired through the touchdown relays, so that it is rendered inoperative whenever the aircraft is in flight.

Testing is accomplished from the yaw damper control panel located on the pilots' center console.

Operation

In the MAGNETIC HEADING mode, used in the lower latitudes where no distortion of the earth's magnetic field is encountered, the directional gyro is slaved to the earth's magnetic field and the indicators display magnetic headings.

In the DIRECTIONAL GYRO mode, used in the higher latitudes where the earth's magnetic field is weak or distorted, the directional gyro acts as the heading reference and maintains the heading manually selected by the pilot.

To operate, the C-12 Compass System requires 115 volt, 400 cycle, single phase AC power and 26 volt, 400 cycle, single phase AC power. The Nr 1 Compass System is connected to the Isolated AC Avionics Bus and the Nr 2 Compass System is connected to Navigation AC Bus Nr 2 for the 115 volt power. The same buses also supply the 26 volt power for their systems, but the voltage is stepped down by a transformer.

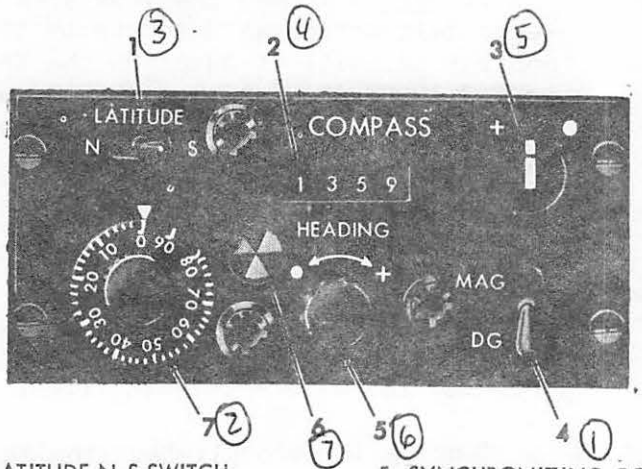

1. LATITUDE N-S SWITCH
2. HEADING INDICATOR
3. ANNUNCIATOR
4. MODE SWITCH
5. SYNCHRONIZING CONTROL
6. POWER ADEQUACY INDICATOR
7. LATITUDE KNOB

DIGITAL CONTROLLER

Procedure

1. Power on aircraft.
2. Set LATITUDE N-S switch to N or S depending on aircraft position.
3. Rotate LATITUDE knob to set present aircraft position in degrees of latitude under the index.

NOTE: After takeoff; if the aircraft is flying north or south, or a variation of a north or south course such as NW; this latitude setting should be changed for every two degrees of latitude crossed, to compensate for varying error rates. On the other hand; on flights directly east or west, this setting does not have to be changed.

4. Set desired compass operating mode (MAG or DG) with the mode switch.
5. If MAG has been selected, allow annunciator needle to center automatically or manually synchronize the system with the synchronizing control.
6. If DG has been selected, set desired aircraft heading in the HEADING indicator with the synchronizing control.

() = order of procedure to determine mag Reading

The lights are tested and illuminated by placing the EMER EXIT switch to the momentary TEST position and then releasing.

Placing the switch momentarily to the EXTING position and then releasing to the ARM position, extinguishes the lights and then arms the lights for normal operation.

The lights can be made portable by pulling the red release handle. When the handle is pulled, a quick disconnect severs the electrical connections and the light remains illuminated. Once the light is removed from the receptacle, it can be extinguished by placing the release handle back to its normal position.

The emergency exit lights receive arming and charging power from the Main DC Bus Nr 1 and the extinguishing circuits receive power from the Isolated DC Bus.

★ 3 reasons: loss of main DC #1
deceleration of 2 G's in flight direction
remove light from clamp

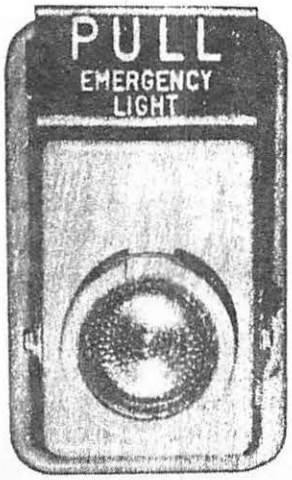

EMERGENCY EXIT LIGHT

Chapter 6

WINDSHIELD ANTI-ICING

The windshield anti-icing system consists of seven windshields that are electrically heated. The windshields include the three front windshields and two side panel windshields on each side. This type of windshield heat is commonly referred to as NESA glass heat.

The windshield anti-icing system consists of three separate systems individually controlled by windshield heat control switches on the pilot's overhead panel marked pilot's, center, and copilot's. The system can be further divided between windshield heat and side panel defrosting. The pilot's and copilot's side panel defrost systems are controlled by the respective pilot's and copilot's windshield heat switches.

In addition to the respective windshield heat control switches, the three front windshields are provided with cold start switches which are used for manual starting at temperatures below -43°C.

The windshield heat control switches are lever-lock type switches having a locking feature in the OFF position. The switches are placed in NORMAL for defogging and deicing.

If severe icing conditions are encountered, the switches can be placed to HIGH which will increase the amount of voltage to the windshields, thus increasing the amount of heat to the windshields. The HIGH position is intended to be used only in flight when the NORMAL position will not provide enough heat.

The heat on the side panel windows will not increase with a change in switch position. Opening a clear vision windshield will cut power to both windshields on that side.

The cold start switches, on the overhead panel, provide manual heat control to the front windshields when the temperature is below -43°C. The manual cycling should be 5 seconds ON and 10 seconds OFF until the windshield temperature reaches -43°C when automatic operation will commence. The windshield heat control switches should be placed in NORMAL, when using the cold start switches. The side windshield heat will start at temperatures down to -54°C.

The pilot's and copilot's windshield heat is wired through the rain removal switch. Whenever the rain removal system is being used, the respective windshield heat is disconnected.

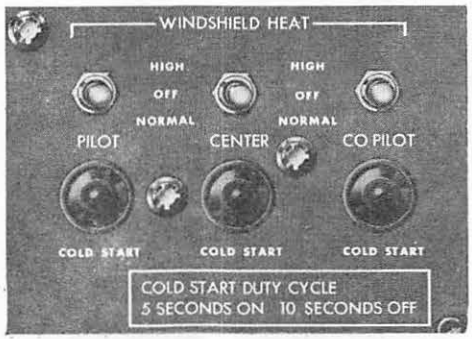

WINDSHIELD HEAT CONTROL PANEL

C-141 INSTRUMENTS

Section 3

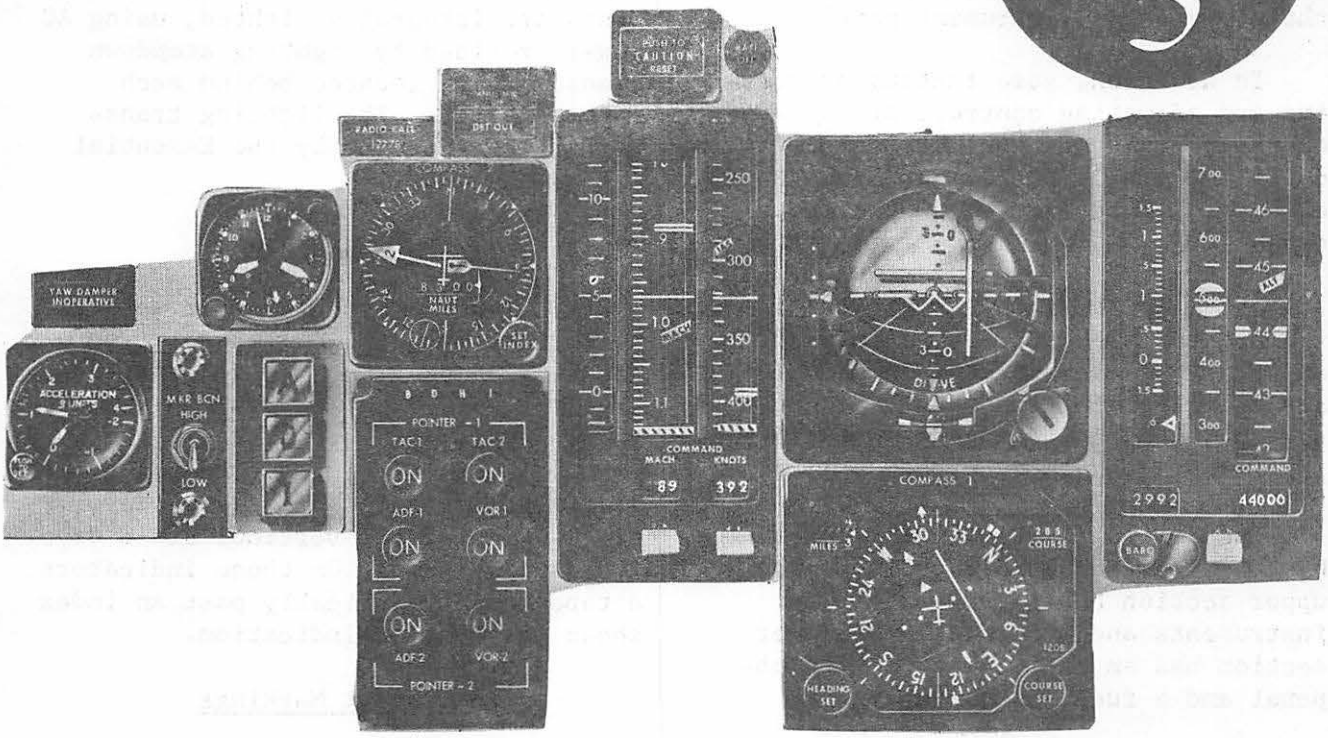

TABLE OF CONTENTS

Chapter 1

INTRODUCTION

Instrument Panels

The flight deck has three major panels, the main instrument panel, the engineer's instrument panel and the navigator's instrument panel.

In addition, some instrument testing and adjusting controls are located on the pilot's and copilot's side consoles. The autopilot and yaw damper controls are mounted on the center console.

The main instrument panel is divided into three sections. The left and right sides each contain a full set of flight instruments. The center section, containing engine and position instruments, is used by both pilots.

The engineer's instrument panel has an upper and lower section. The upper section has 12 sub-panels for instruments and controls. The lower section has an engine instrument sub-panel and a fuel system sub-panel.

The navigator's instrument panel has 33 sub-panels. Most of these sub-panels are devoted to various navigational aids. However, three instruments covered in this section are mounted here. These are an altimeter, the true airspeed indicator, and a clock. The digital controller for C-12 Compass Nr 1 is located on this panel.

Panel and Instrument Lighting

All instrument and panel lighting is controlled by rotary switches mounted on the overhead panels. The instruments are integrally lighted, using AC power provided by lighting stepdown transformers, located behind each rotary switch. The lighting transformers are powered by the Essential AC Busses.

Instrument Types

All instruments are front mounted. Either a clamp type or a bezel type mounting is used.

The C-141 has two types of instruments. Most of them are the conventional dial type of indicators. However, the C-141 also has vertical scale tape indicators (VSI). On these indicators a tape moving vertically past an index shows the desired indication.

Instrument Markings

On some instruments, limit and range markings are provided. The conventional colors are used. Red for limits, green for normal operation, and yellow for caution. On instruments with range markings, a white index marker, partly on the cover glass and partly on the instrument case indicates if the cover glass has slipped.

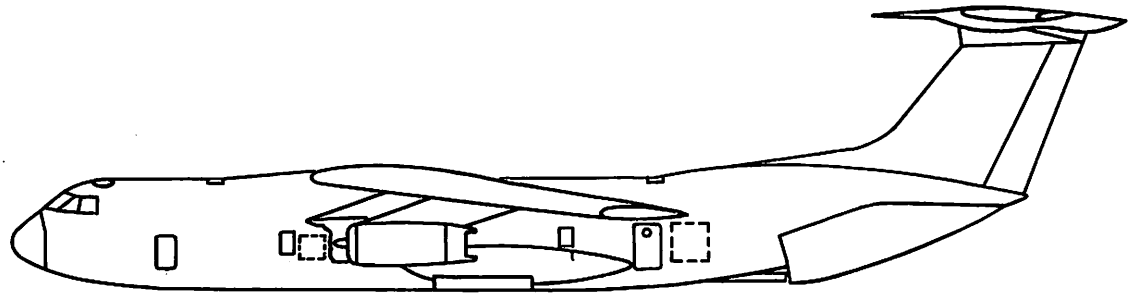

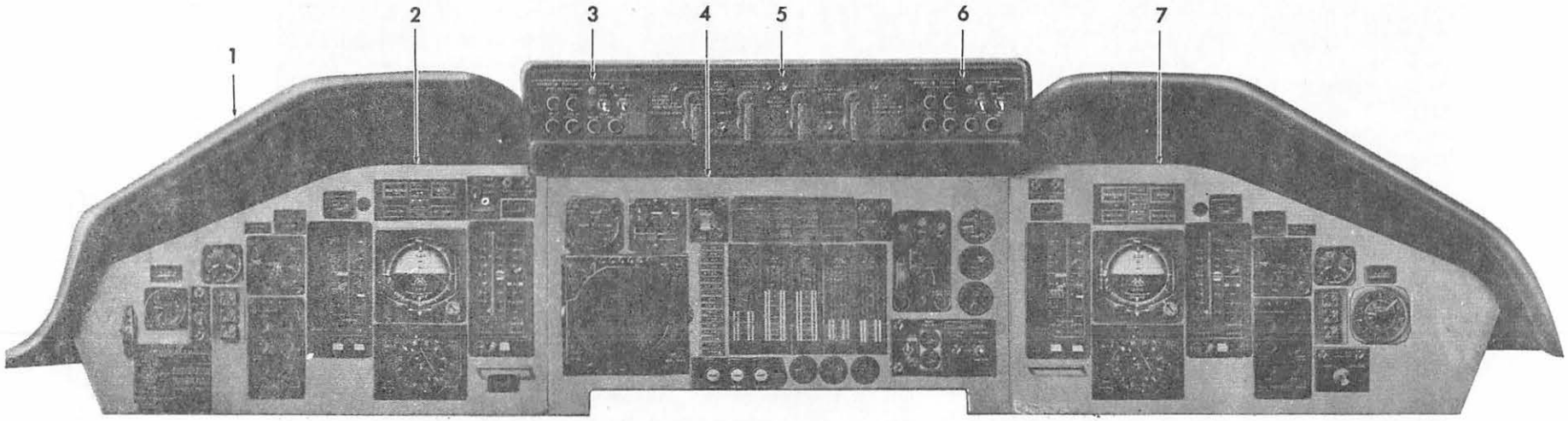

1. GLARE SHIELD
2. PILOT'S INSTRUMENT PANEL
3. PILOT'S NAVIGATION SELECTOR PANEL
4. PILOTS' CENTER INSTRUMENT PANEL
5. EMERGENCY ENGINE SHUTDOWN PANEL
6. COPILOT'S NAVIGATION SELECTOR PANEL
7. COPILOT'S INSTRUMENT PANEL

MAIN INSTRUMENT PANEL

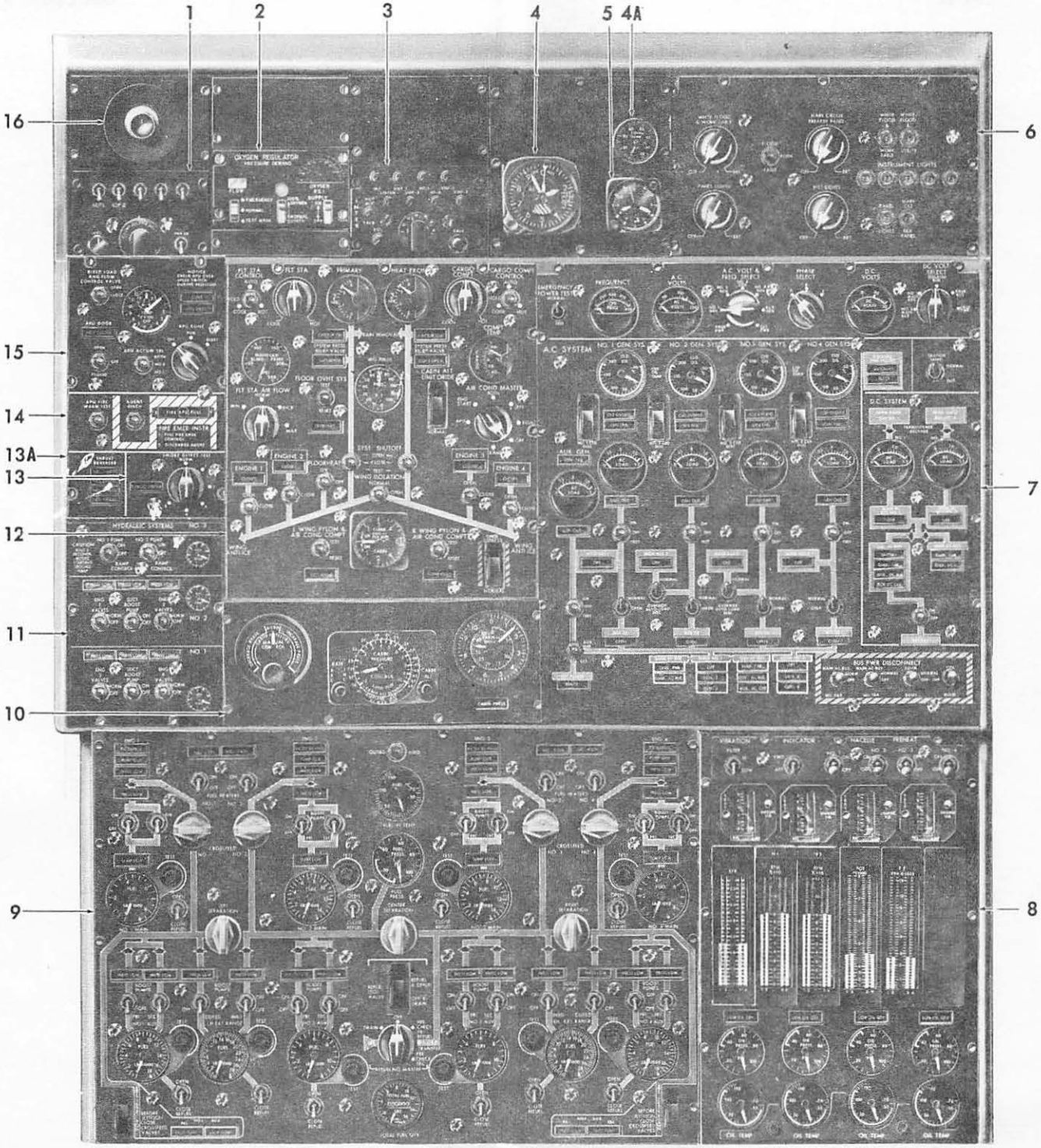

1. PUBLIC ADDRESS PANEL
2. OXYGEN REGULATOR PANEL
3. INTERPHONE PANEL
4. ALTIMETER
4A. TOTAL AIR TEMPERATURE INDICATOR
5. CLOCK
6. STATION LIGHTING PANEL
7. ELECTRICAL PANEL
8. ENGINE INSTRUMENT PANEL
9. FUEL PANEL
10. FLIGHT STATION PRESSURIZATION PANEL
11. HYDRAULIC PANEL
12. ENVIRONMENTAL PANEL
13. SMOKE DETECTOR PANEL
13A. THRUST REVERSER PRESSURE INDICATOR PANEL
14. APU FIRE PANEL
15. APU PANEL
16. GASPER OUTLET

FLIGHT ENGINEER'S PANEL

Chapter 2

PITOT-STATIC SYSTEMS

Introduction

The pitot-static systems provide pressures to operate the central air data computers (CADC), flight data recorder, three altimeters, and an airspeed indicator through two independent systems. These pressures are picked up by four pitot-static tubes, two on each side of the fuselage, mounted just aft and slightly above the crew entrance door.

balanced system

Pitot-Static Tubes

There is a pitot opening and a static opening in the head of each pitot-static tube. (See Page 3-7). The lower tubes supply both pitot and static pressures. The upper tubes supply static pressure only as the pitot ports are plugged.

The static system is a balanced static system in that the static vents of the upper tube on one side of the aircraft are connected to the static vents of the lower tube on the opposite side of the aircraft. This arrangement provides stable static pressure regardless of crosswinds, slipping or skidding of the aircraft.

Pilot's Pitot-Static System

The lower left and upper right pitot-static tubes form the pilot's (or Nr 1) pitot-static system. This system furnishes pitot and static pressures to the Nr 1 CADC only.

Copilot's Pitot-Static System

The upper left and lower right pitot-static tubes form the copilot's (or Nr 2) pitot-static system. The copilot's system furnishes pitot and static pressures directly to the Nr 2 CADC, flight data recorder, navigator's and engineer's altimeters, and (if installed) the pilot's standby airspeed and standby altimeter indicators.

Pitot-Static Systems Drains

Two drain boxes, one on each side of the fuselage, and internally mounted just below the pitot-static tubes, permit access to capped drain lines which can be used for moisture drainage from the tubes. Capped drain lines located under each CADC, permit drainage of the rest of the systems.

CAUTION

Do not drain the system in flight. The rapid pressure change could damage the sensitive transducers within the CADCs.

Two manual shutoff valves are installed in the copilot's (Nr 2) system. They are used to isolate a portion of the system in the event of a leak. The valves are in the right hand underdeck area, just forward of the crew's latrine, and can be reached through an access door in the floor near the engineer's station. The shutoff valves are normally open. When both valves are closed, the flight data recorder, and the engineer's and navigator's altimeters are isolated from the system. Pitot and static pressure will still be available to the Nr 2 CADC and the pilot's standby instruments (if installed).

CADC #1 located in left forward under deck area

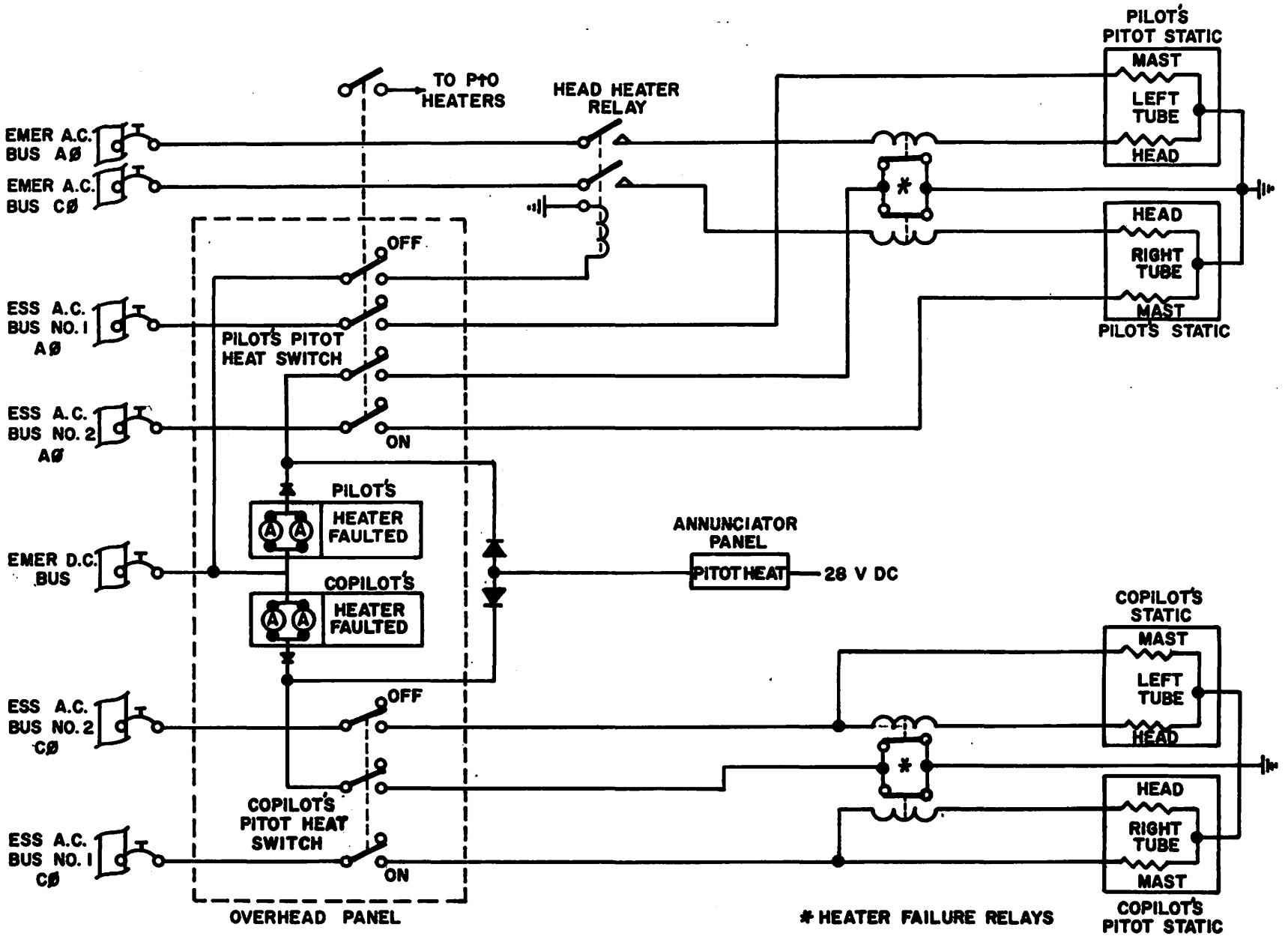

PITOT-STATIC ANTI-ICE HEATER SYSTEM

no warning if you lose mast heater
but several lights if lose head heater

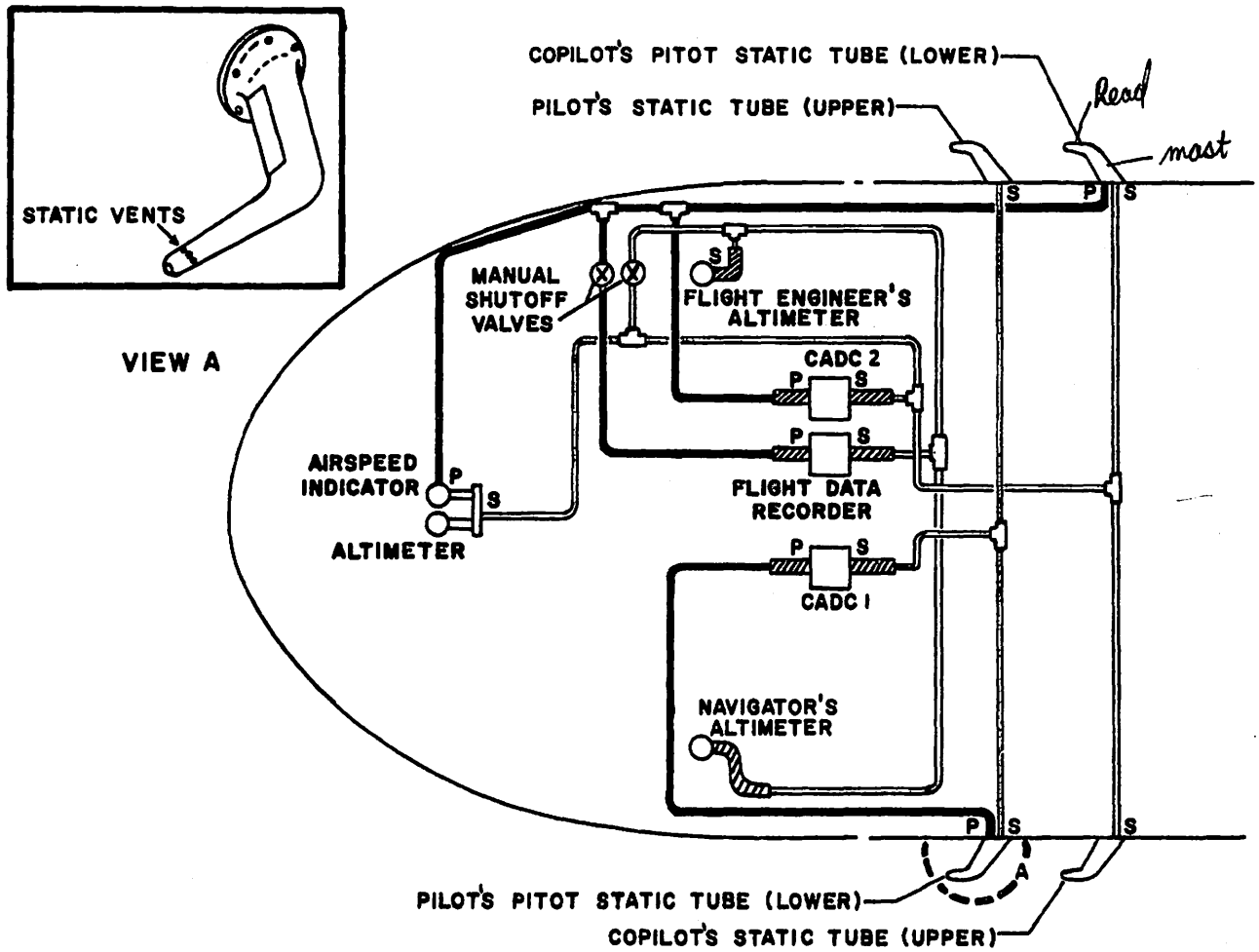

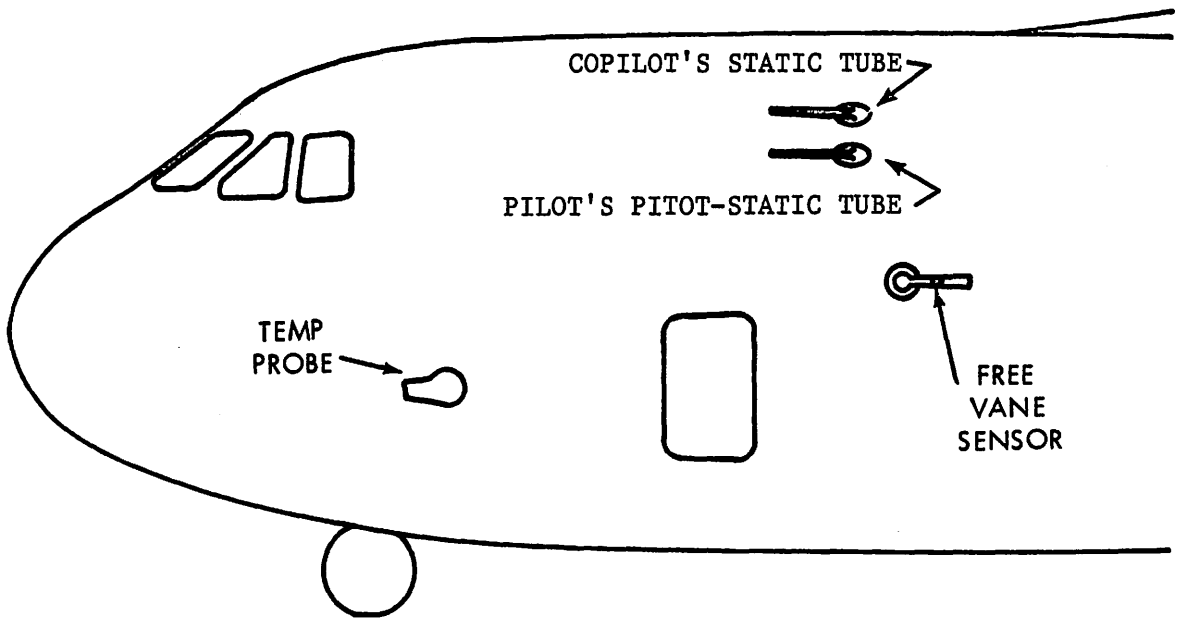

PITOT-STATIC SYSTEMS SCHEMATICS

CADC #2
FDR
NAV ALT
ENGR ALT
} served by lower right, upper left, #2 system (also furnishes altitude & mach hold to autopilot)

Pitot-Static System Anti-Icing

Anti-icing of the pitot-static tubes and masts is provided by 115 volt, 400 cycle, single phase AC powered heating elements. Each pitot-static tube contains two anti-ice heating elements. One in the tube head, to prevent ice from covering the pitot and static vents. The other heating element is in the tube mast and prevents ice buildup on the mast.

All the heating elements are powered by the Essential AC Busses except the pilot's pitot-static head heater elements. The pilot's pitot-static head heater elements are powered by the Emergency AC Bus and will keep the Nr 1 system pitot-static vents open when operating with only emergency power available.

lose mast heater ⇒ no pilot indication

The anti-icing systems are controlled by two OFF-ON switches on the pilot's overhead panel.

only connected to head heater

A HTR FAULTED light above each switch will illuminate if a power loss should occur in either head heating element and the switch is ON. In addition, a PITOT HEAT light on the annunciator panel and both master CAUTION lights will illuminate.

pilot's switch energizes 4 Pto probe heaters also
left seat

Standby Instruments

The instruments operating on direct pitot and static pressures (not connected through a CADC) are the pilot's standby airspeed indicator and altimeter, and the navigator's and engineer's altimeters.

NOTE: On all aircraft prior to AF64-0643, a pilot's standby altimeter and airspeed indicator were installed. Aircraft AF64-0643 and above will not have standby instruments for the pilot.

When installed, the pilot's standby airspeed indicator and altimeter are mounted on the top center of the pilot's instrument panel.

Both of the pilot's instruments are of the conventional type, but are only one-half the size of a conventional altimeter or airspeed indicator. They are covered by a spring loaded, hinged plate, and are used only if the vertical scale flight instruments have malfunctioned.

NOTE: The pilot's standby airspeed indicator and altimeter are being removed as the aircraft go back to Lockheed for updating.

The navigator's and engineer's altimeters are also of the conventional type and like the pilot's altimeter, can be adjusted by using the knob and barometric scale provided on each altimeter.

The pilot also has a standby compass mounted forward of the pilot's overhead panel. It should only be used, if both of the C-12 Compass Systems fail.

Total Temperature Indicators

On aircraft AF65-9397 and up, there are two total temperature indicators. One is located on the pilots' center instrument panel and one is on the engineer's instrument panel. They indicate total temperature in degrees centigrade. Total temperature is defined as ambient air (outside) temperature plus ram effect. Aircraft prior to AF65-9397 and those not modified by T.O. 1C-141A-922 have only one total temperature indicator, which is located on the pilots' center instrument panel.

The total temperature indicators use 115 volt AC power from the Main

pitot static shutoff valve normally wired open, when pulled cut off FDR, NAV ALT and ENGR ALT
↳ located aft of left engr's seat on floor

total temp probe Nr 1 = engr total temp & CADC #1
Nr 2 ⇒ pilots total temp & CADC #2

AC Bus Nr 1. Both indicators are protected by a single circuit breaker labeled TOTAL TEMP IND. A power off mechanism displays the word OFF through a window in the face of the indicator should electrical power be lost.

There is a total temperature probe on each side of the fuselage below the pilots' windows. Each temperature probe contains two temperature sensing elements. Probe Nr 1 is on the left side and has one sensor connected to the engineer's total temperature indicator and the other sensor is connected to CADC Nr 1. Probe Nr 2 is on the right side of the fuselage and has one sensor connected to the total temperature indicator on the center instrument panel and the second sensor is connected to CADC Nr 2.

Each temperature probe has a 115 volt AC deicer element which is energized by a switch on the pilots' overhead panel labeled TEMP PROBE DEICE. The Nr 1 probe deicer element is powered by Essential AC Bus Nr 1. Nr 2 probe deicer element is powered by Essential AC Bus Nr 2.

NOTE: There is no warning for a deicing system failure.
not reliable except above 160 KCAS when total temp de-ice is on.

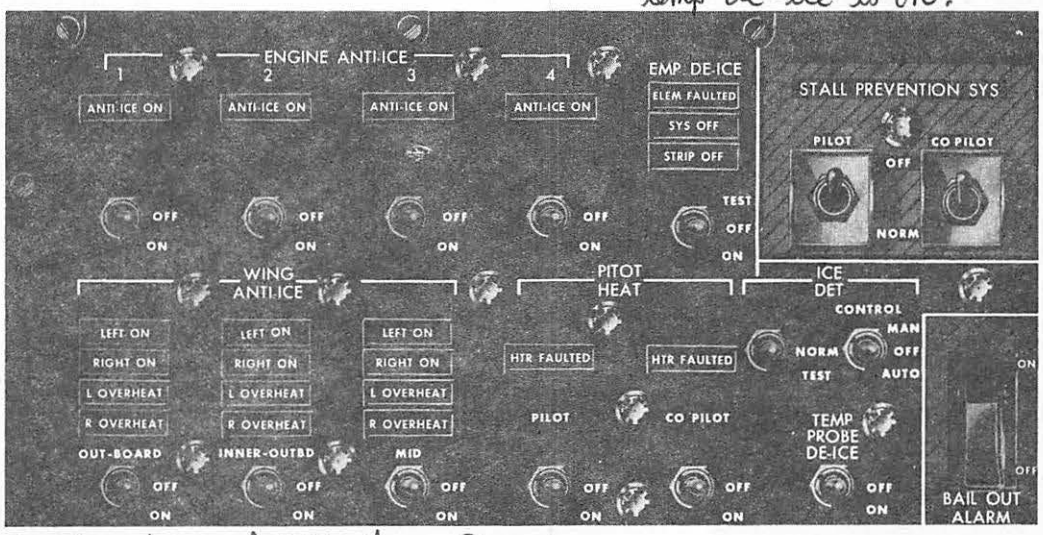

one heating element on each TT probe
2 sensors on each probe

lose power to total temp indicator: OFF word appears in center of instrument

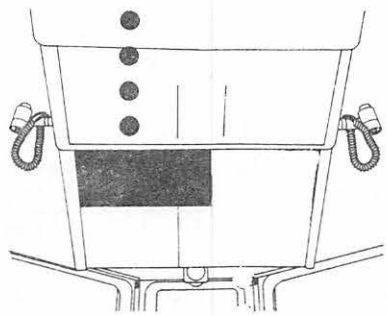

ANTI-ICING SYSTEMS CONTROL PANEL

Chapter 3

CENTRAL AIR DATA COMPUTERS

Introduction

Two complete and independently operated Central Air Data Computers (CADCs) are installed in the C-141 to supply primary flight information to the pilot's and copilot's Vertical Scale Flight Instruments (VSFI). They also provide control and warning information to the Automatic Flight Control System (AFCS), air conditioning systems, elevator artificial feel system, rudder pressure reducers, overspeed warning system, ASN-24 navigation computers, stall warning system, rudder pressure warning, and navigator's true airspeed indicator.

Pitot-static pressures, from the aircraft pitot-static systems, and temperature information, from the total temperature probes, are supplied to each CADC. The CADCs transform these primary input variables into electrical servo signals representing true airspeed, computed indicated airspeed, Mach number, pressure altitude, and vertical velocity indication.

CADC Nr 1 receives pitot-static pressures from the pilot's system and temperature information from a temperature sensor mounted in the left total temperature probe. The electrical signal outputs are amplified and are displayed on the pilot's primary flight instruments. The navigator's true airspeed indicator (if selected) is also operated by CADC Nr 1. Electrical power is supplied by the 115 volt, 400 cycle Emergency AC Bus. A circuit breaker labelled CADC No. 1 provides power circuit protection. There are no control circuits and the system is in operation whenever the Emergency AC Bus is powered.

CADC Nr 2 has the same power requirement, but power is supplied from the Navigation AC Bus Nr 2. Whenever power is applied to Navigation AC Bus Nr 2, the system is in operation. Circuit protection is supplied by a circuit breaker labelled CADC No. 2. Pitot-static inputs for CADC Nr 2 are provided by the copilot's system. A temperature sensor in the right total temperature probe provides temperature information. Electrical signal output is displayed on the copilot's primary flight instruments and the navigator's true airspeed indicator (if selected).

Both CADCs are located on the underdeck equipment racks. CADC Nr 1 is on the left side in the electronic equipment area and CADC Nr 2 is on the right side of the center equipment rack.

Testing

On the front panel of each CADC is a push-to-test switch and four malfunction warning lights. The warning lights are labelled Hp (pressure altitude), V_t (true airspeed), V_c (computed IAS), and M (Mach). Monitor circuits within the CADCs will sense malfunctions and illuminate one or more warning lights depending on which circuit has malfunctioned.

Actuating the push-to-test button will drive the CADC through a self-test cycle. The moment the test cycle starts, all four warning lights should illuminate. The lights will not go out until the preset values are reached. The time limit for self-testing is 150 seconds, at which time all four warning lights should be OUT. Should a light remain ON, a malfunction is indicated in that circuit.

NAVIGATOR'S TRUE AIRSPEED INDICATOR

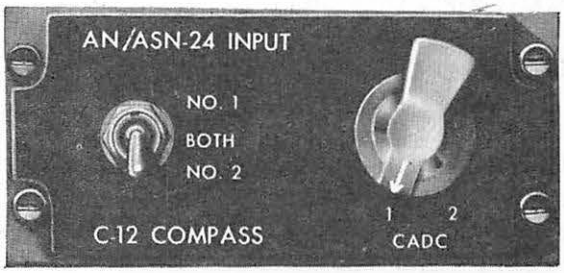

CONTROL INPUT SELECTOR PANEL 3K11547

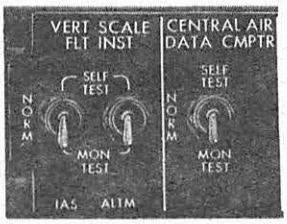

PILOT'S AVIONIC EQUIPMENT SWITCHING PANEL ASSEMBLY

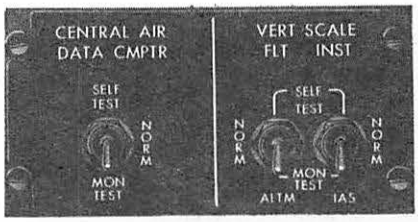

COPILOT'S AVIONIC EQUIPMENT SWITCHING PANEL ASSEMBLY

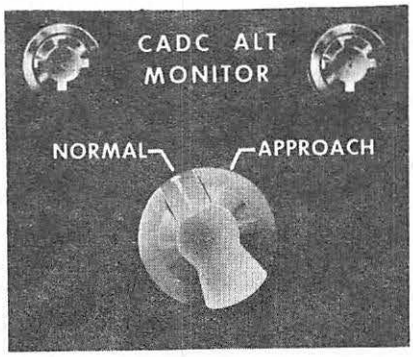

CADC ALTITUDE MONITOR SWITCHING PANEL

CADC CONTROLS

Readout of the preset values will be displayed on the corresponding primary flight instruments. In addition, a CADC INOP light will be displayed on the annunciator panel, and both master CAUTION lights will illuminate.

In addition to the test switches on the CADC, there is a test switch on each side console. These switches have three positions, SELF TEST-NORMAL-MON TEST. The test switch for Nr 1 CADC is on the pilot's side console and the test switch for Nr 2 CADC is on the copilot's side console.

3 flags

The SELF TEST position is used for normal testing of the system and this position corresponds to the push-to-test switch on the CADC front panel. When the switch is held to the SELF TEST position, the CADC reacts and drives the vertical scale flight instrument to preset test values within 150 seconds. These values are:

set 29.92 in barometric set knob

Altitude	50,000' ± 110'
IAS	225 knots ± 3.5
Mach	.92 ± 0.015
Navigator's TAS	527 knots ± 5

During the test cycle the vertical velocity indicator will indicate 20,000 feet per minute climb.

As the Mach indicator passes .3 Mach, the EJECTOR ON light on the flight engineer's environmental panel will go OUT. An audible aircraft overspeed warning will be heard in the headsets as Mach 0.825 is reached.

Throughout the entire test cycle, flags will appear on the Mach, indicated airspeed, and altitude indicators. The CADC INOP lights on the annunciator panel will come ON, and both master CAUTION lights will illuminate.

The test cycle is complete when the vertical velocity indicator returns to zero. The switch is then released and the CADC system will return to normal mode of operation.

2 flags

Holding the switch in MON TEST (Monitor Test) will test the CADC monitor circuits. This is done to assure the monitor circuit will operate at minimum prescribed values. The monitor circuits normally sense mechanical or electrical malfunctions within the CADC and trigger warning signals which warn the pilots of the malfunctions.

During monitor test, flags should appear in the Mach and indicated airspeed instruments. The CADC INOP light will illuminate on the annunciator panel, and the three warning lights on the front panel of the respective CADC will come ON (Hp (pressure altitude) light will not illuminate). In addition, the master CAUTION lights will illuminate.

Releasing the switch will return the CADC to normal mode of operation. All CADC test switches are interlocked through the touchdown relays to prevent testing the CADCs in flight.

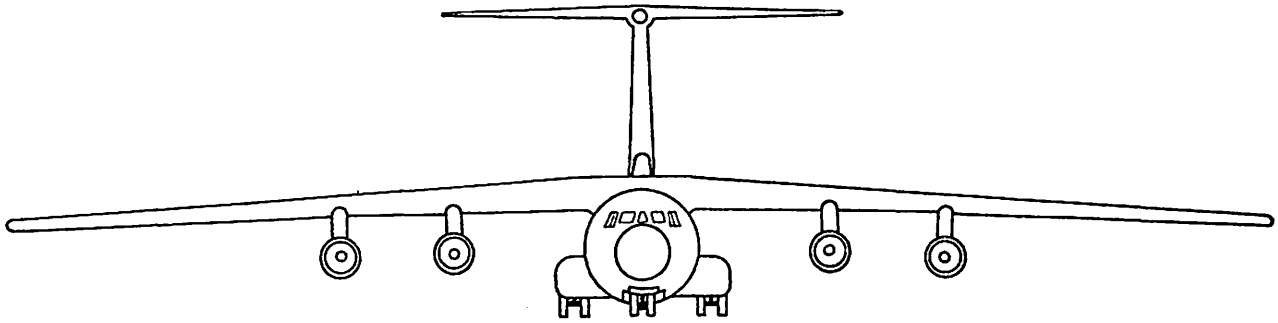

Chapter 4

VERTICAL SCALE FLIGHT INSTRUMENTS (VSFI)

Introduction

The pilot's and copilot's instrument panels are equipped with independently operated electro-mechanical vertical scale flight instruments. Each panel has two group type indicators. One indicator supplying airspeed and Mach information, and the other indicating vertical velocity and altitude. Each indicator is integrally lighted and divided into three display columns. Each column contains a vertically moving tape moving past a stationary horizontal reference line across the center of the indicator.

Each indicator is driven by a separate amplifier mounted on the top shelf of the center equipment rack and receives electrical signals from the central air data computers. The pilot's indicators receive signals from CADC Nr 1 and the copilot's indicators receive signals from CADC Nr 2.

The indicators are powered by 115 volt, 400 cycle single phase AC power. The pilot's VSFI are powered by the Emergency AC Bus and the copilot's VSFI by the Navigation AC Bus Nr 2. An electrical or mechanical failure of one indicator will not affect any other VSFI.

Mach-Airspeed

Two Mach-Airspeed, Indicators provide the pilot and copilot with indications of Mach number, and computed indicated airspeed. The Mach number is on the center tape, and computed indicated airspeed on the right tape.

The Mach number is indicated on a vertically moving scale in the middle column. The Mach tape also moves past a fixed horizontal reference and is graduated from 0.2 Mach through 1.0 Mach in hundredths of Mach increments. The tape is numbered at each one-tenth Mach increment. A striped SAFE MACH symbol is attached to the tape at 0.825 Mach and indicates the maximum safe Mach number speed when the symbol is aligned with the horizontal reference line.

A command Mach bar is used in conjunction with the Mach tape, and may be set to any Mach number between 0.2 and 1.0 Mach. The command bar position is set by moving the command Mach slewing switch on the base of the indicator, up or down. The set position of the command Mach bar is indicated in the command Mach counter window located over the slewing switch.

Releasing the slewing switch will lock the command bar at the set Mach value. The command bar remains at the top or the bottom of the Mach column until the set Mach value comes into view. Then the command bar will follow the tape at the set Mach value. When the command bar is aligned with the horizontal reference line, the aircraft is flying the command Mach value.

A warning flag, that reach MACH will come into view just below the reference line to indicate unreliable Mach information is being displayed or power has failed.

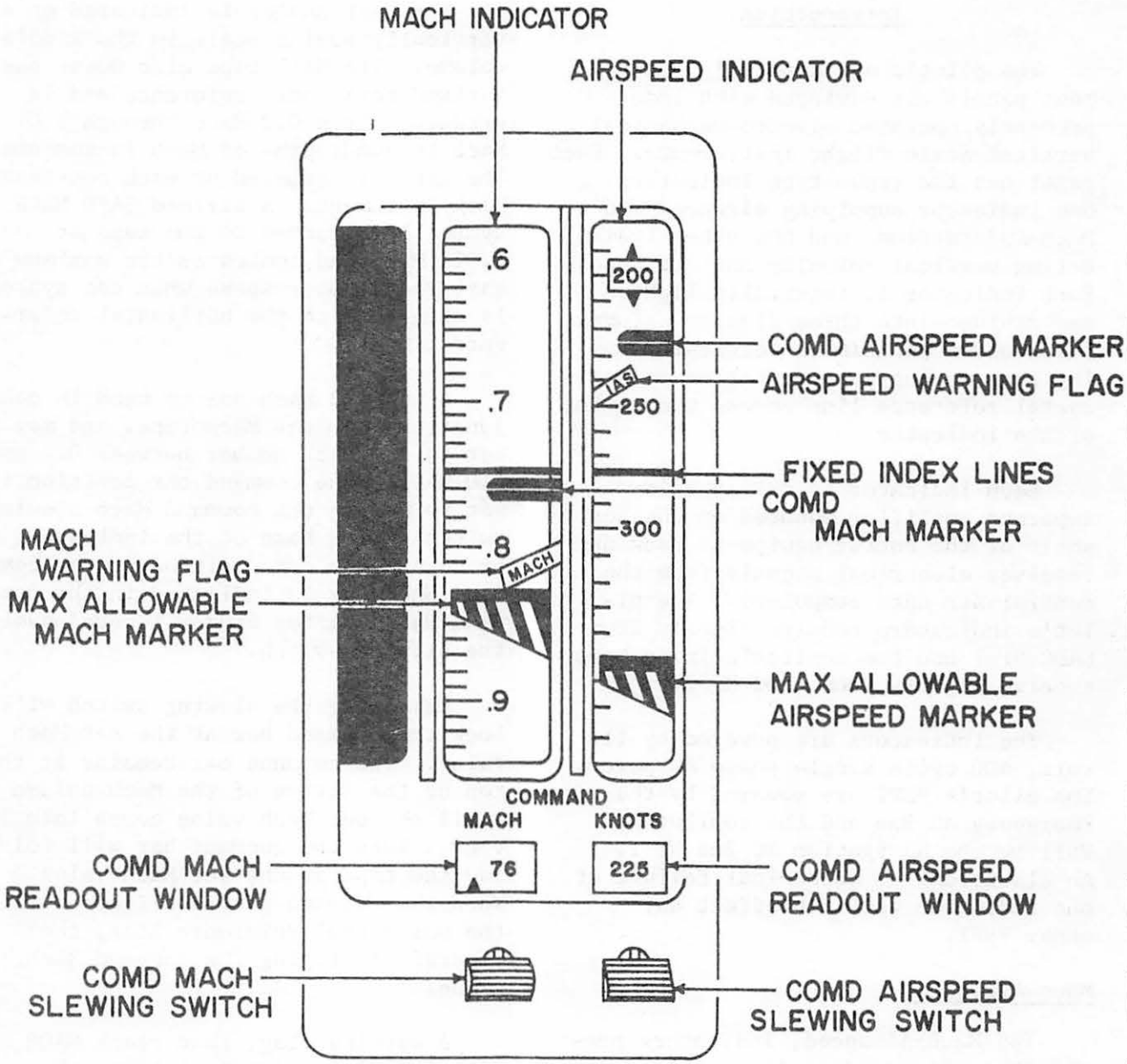

MACH-AIRSPEED

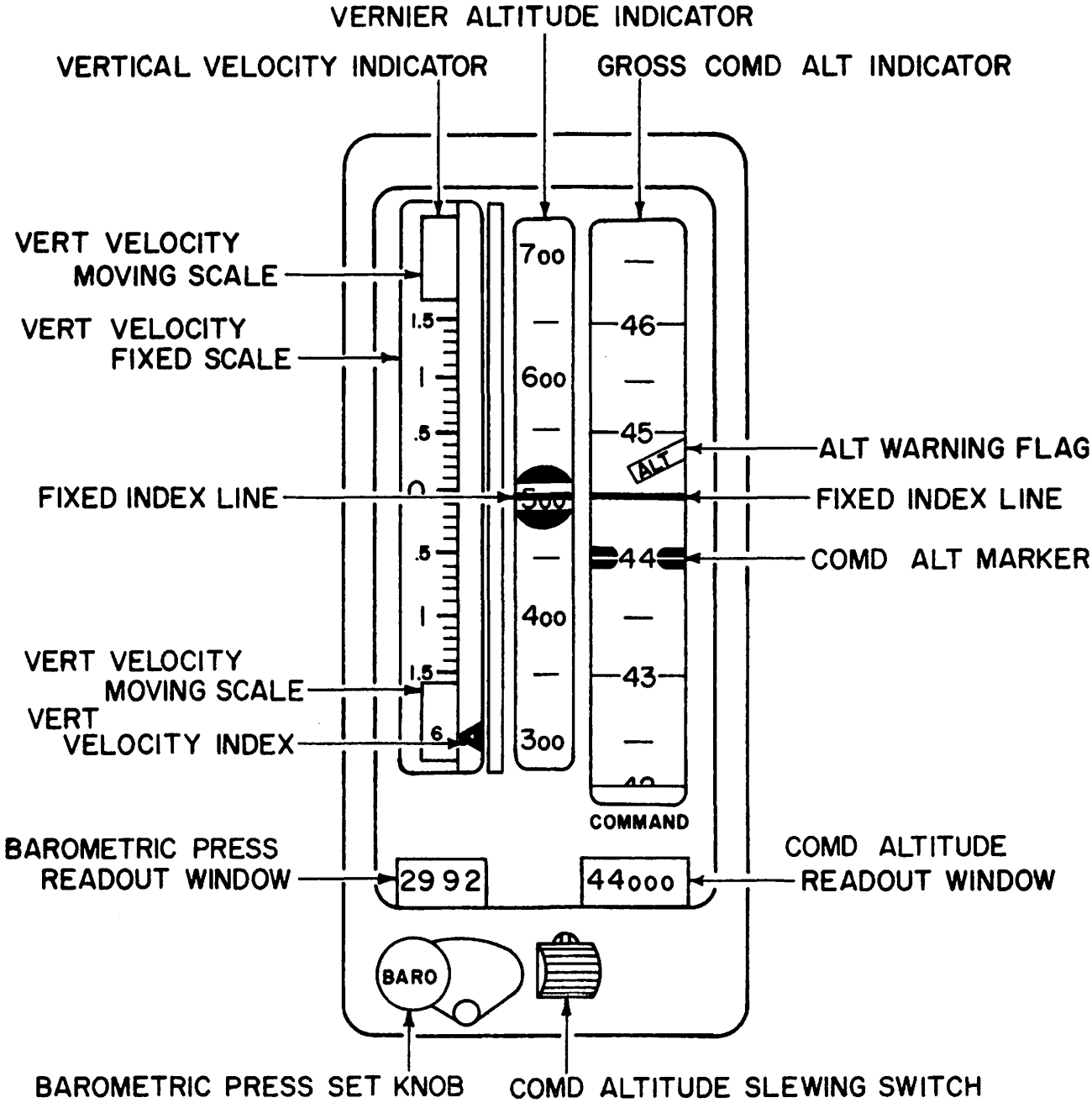

ALTITUDE-VERTICAL VELOCITY INDICATOR

Computed indicated airspeed is indicated in the right column on a vertically moving tape moving past a fixed horizontal reference. The tape scale is graduated from 50 through 600 knots in 10 knot increments. Between the 100 through 200 knot scale, each 20 knot increment is numbered. Above 200 knots each 50 knot increment is numbered. A striped maximum safe airspeed symbol is attached to the 350 knot increment of the tape and indicates maximum safe airspeed when the symbol is aligned with the horizontal reference.

A command airspeed bar is used in conjunction with the tape, the command airspeed counter, and the command airspeed slewing switch. Pre-selection and operation of the command airspeed bar is identical to that of the command Mach bar, with one exception. The command airspeed slewing switch has a side detent position to the right of center. When the switch is in the side detent position, the command airspeed bar will align itself with the horizontal reference line and the indicated airspeed, as read at the horizontal reference, will appear in the command airspeed counter window. Any change in airspeed will be indicated immediately in the command counter window.

A warning flag, reading IAS, will come into view if the displayed airspeed is unreliable or power is lost.

Vertical Velocity - Altitude Indicators

Both the pilot's and copilot's indicator has three columns with a vertically moving tape. The left column contains the vertical velocity indicator, the center column has the vernier (sensitive) altitude scale and the right column has the gross altitude scale. The altitude tapes move past a fixed horizontal reference and the vertical velocity tapes move past a pointer or the pointer moves past them. Altitude and vertical velocity for the pilot's indications comes from CADC Nr 1. The copilot's information comes from CADC Nr 2.

Vertical velocity information is displayed in the left column. Its operation is somewhat different than the other flight instruments in that a moving pointer will move past a fixed scale on the face of the indicator should the vertical speed be 1500 feet per minute or less. The fixed scale is graduated from 0 through 1500 feet per minute climb or descent in 100 foot per minute graduations. Each 500 fpm increment is numbered.

When the vertical speed increases above 1500 feet per minute, the pointer will stop at the top (or bottom) of the column and a vertical tape will move past it. The vertical tape is graduated in 1000 fpm increments up to 6000 fpm, in 2000 fpm increments up to 10000 fpm, and in 5000 fpm increments up to 20000 feet per minute. The vertical speed of the aircraft is indicated at all times by the pointer.

The altitude information is indicated in the middle and right columns. The middle column has a vertically moving tape indicating vernier (sensitive) altitude and the right column has a vertical moving tape indicating gross altitude. Both tapes move past a fixed horizontal reference and must be used together to indicate aircraft altitude.

The vernier tape (middle column) is graduated from zero through 1000 feet, in 50 foot increments. Each 100 foot increment is numbered. The vernier

VVI & altimeter share same loop
all others have separate loops

tape will make one complete revolution for each 1000 feet indicated on the gross altitude tape.

The gross tape is graduated from minus 1000 feet to plus 60000 feet in 500 foot increments, with each 1000 foot increment being numbered.

A command altitude bar is used in conjunction with the vertical moving tapes, command altitude slewing switch and command altitude counter. Operation of the command bar is identical to that of the airspeed indicator. The slewing switch has a side detent position. Command altitude is indicated in the window when the slewing switch is in the CENTER position.

The command altitude bar will remain at the bottom or top of the column until the preset command altitude appears in the gross altitude column. The command bar will then position itself to the preselected command altitude value on the vertically moving gross altitude tape. Command altitude is reached when the command bar is aligned with the fixed horizontal reference.

Placing the altitude slewing switch in the side detent position allows digital readout of aircraft altitude in the command counter window. When self-testing the CADCs or the VSFIs, the slewing switch must be in the side detent position.

On the lower left portion of the instrument case is a BARO knob which is used to make barometric pressure (altimeter settings) adjustments to the altitude indicators. Digital readout of the barometric setting appears in a window just above the BARO knob.

Power failure or unreliable altitude information is indicated when a flag (reading ALT) appears in the gross altitude column above the horizontal reference line.

VSFI Testing

There are two VSFI switching panels installed for the purpose of testing the vertical scale flight instruments. The pilot's VSFI switching panel is on the pilot's side console and will test the pilot's Mach, IAS, and altimeter indicators. The copilot's VSFI switching panel is on the copilot's side console and is used to test the copilot's Mach, IAS, and altimeter indicators.

Each switching panel has two test switches. One switch is labeled "IAS" and will test the Mach and IAS indicator. The other is labeled "ALT" and will test the altimeter. Each switch has three positions (NORM - SELF TEST - MON TEST), and is spring loaded to the NORM position. Holding either (or both) switches to the SELF TEST position will drive the indicators to the same preset values as the CADC did, but at a much faster rate. The malfunction flags will appear in the indicators being tested. To attain the correct altimeter preset test value, 29.92" Hg must be set into the barometric pressure readout window. Releasing the switches will allow the indicators to return to normal operation.

The MON TEST position of either switch is used to assure the pilots that the indicator monitor circuits will operate at a minimum prescribed value. Holding the switches in the MON TEST position will trip the

monitor circuits within the indicators and display a malfunction flag in the indicator being tested. Releasing the switches will reset the monitor circuits and pull the malfunction flags out of view.

The VSFI test switches will operate in flight or on the ground and are primarily used to check the accuracy of the indicators.

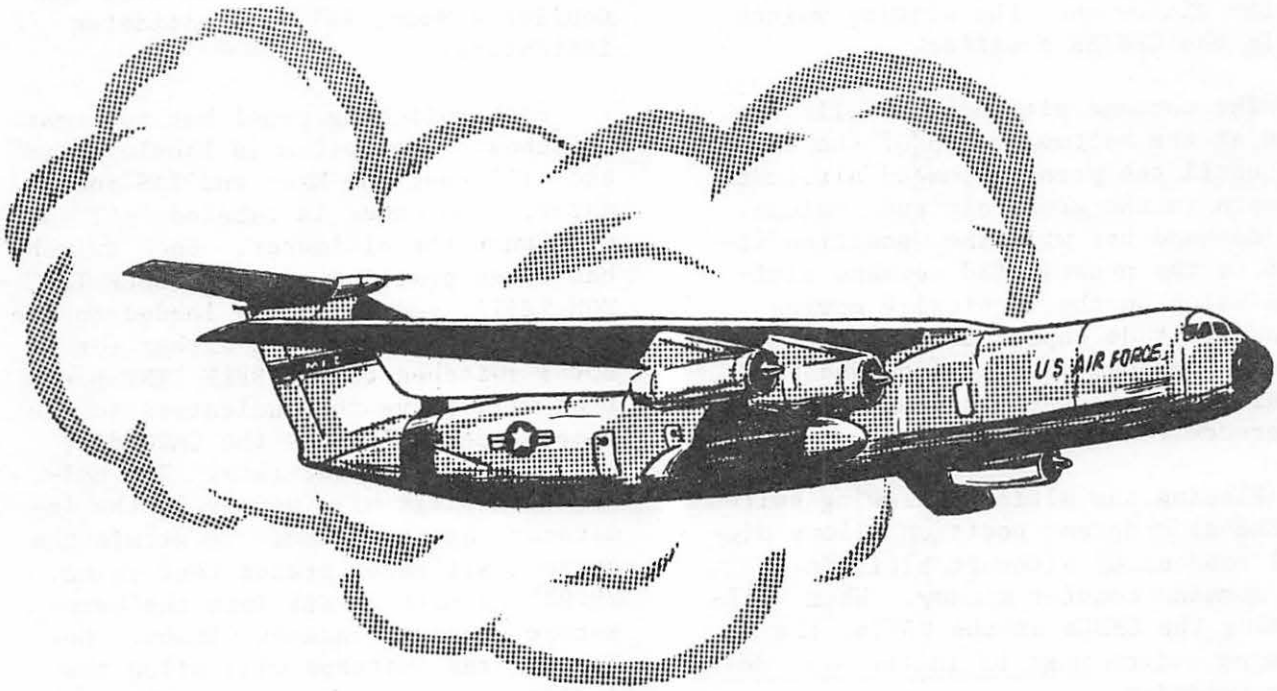

Chapter 5

VERTICAL SCALE ENGINE INSTRUMENTS

Introduction

There are five vertical scale engine instrument (VSEI) systems on the center instrument panel for the pilots and five on the engineer's panel. In turn, each of the five indicator systems give indications for each of the four engines.

There is one engine instrument converter unit for the following systems: EGT, tachometer, and fuel flow. This engine instrument converter unit is located in the right underdeck equipment rack. The converter contains amplifier modules, which take transmitter signals, amplifies them, and then sends the signals on to operate indicator servo motors. These modules are interchangeable in the same system. For example, the Nr 1 EGT could be interchanged to operate the Nr 2 EGT. A set of fuses on the converter protect each individual instrument presentation feeding through the converter unit. Power for the converter unit is supplied by the Essential Bus Nr 2 through four circuit breakers (one per engine) labelled: ENG EGT - RPM - FUEL FLOW.

The EPR system has four converter transmitters, one for each engine EPR indication. They are located in the base of each engine pylon. Power is provided by the Isolated AC Bus through four individual circuit breakers.

Exhaust Gas Temperature (EGT) Indicators

The four-channel EGT indicators on the pilots' center panel and engineer's panel show the average temperature in the engine turbine case. Six thermocouples, electrically connected in parallel, are installed in each engine exhaust section. Signals developed by the thermocouples are fed through the converter unit to the indicator servo motor which positions the vertical scale. The scale is calibrated from $0^{o}C$ to $700^{o}C$.

Power (115 volt, 400 cycle, single phase AC) for the EGT indicators is supplied by Essential AC Bus Nr 2. There are four circuit breakers on the engineer's circuit breaker panel. Notice that the EGT, tachometer and fuel flow indicators for an engine share the same circuit breaker.

Tachometer Indicators

There are two four-channel tachometers on the pilots' center panel and two on the engineer's panel. This is because we have both an N_1 and N_2 compressor speed indicating system.

The N_1 indicating system shows the speed of the low speed compressor. The N_2 indicator shows the speed of the high speed compressor.

There are two tachometer generators per engine, one for each system. The N_1 tachometer generator is driven by the front accessory drive. The N_2 tachometer generator is driven by the main accessory drive.

As the engine speed changes, a variable signal is developed by the tachometer generator, fed to the converter unit, and thence to the indicator to move the vertical tape. The tape is calibrated from 0 to 110 percent.

Again 115 volts, 400 cycle, single phase AC power is supplied by Essential AC Bus Nr 2. These indicators use the same four circuit breakers as the EGT and fuel flow indicators.

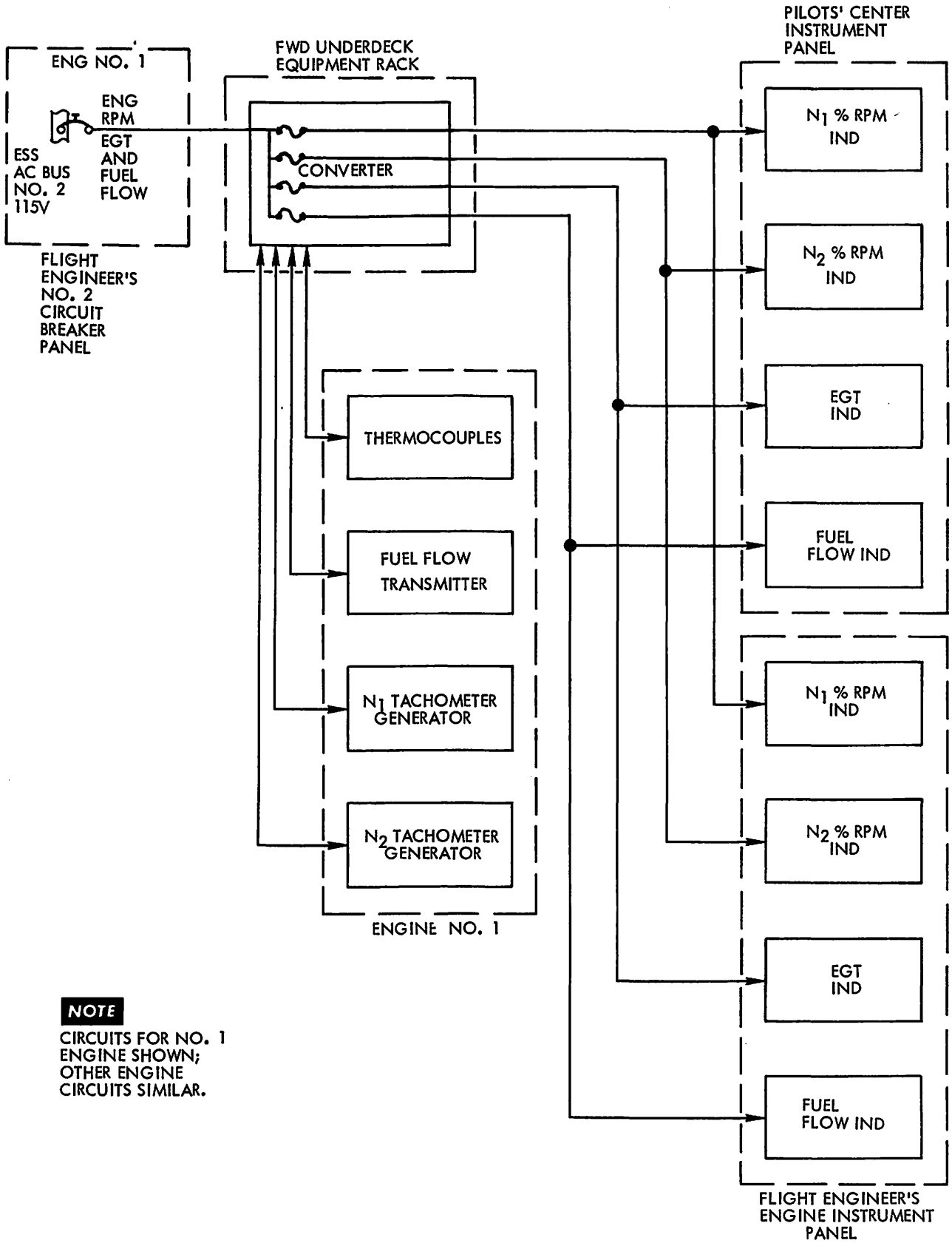

NOTE

CIRCUITS FOR NO. 1 ENGINE SHOWN; OTHER ENGINE CIRCUITS SIMILAR.

ENGINE RPM-TACHOMETER, FUEL FLOW, AND EXHAUST GAS TEMPERATURE INDICATING SYSTEM BLOCK DIAGRAM

one circuit breaker protects: RPM N_1
RPM N_2
EGT
FF for each engine, hence there are a total of 4 circuit breakers, one for four parameters on each of four engines

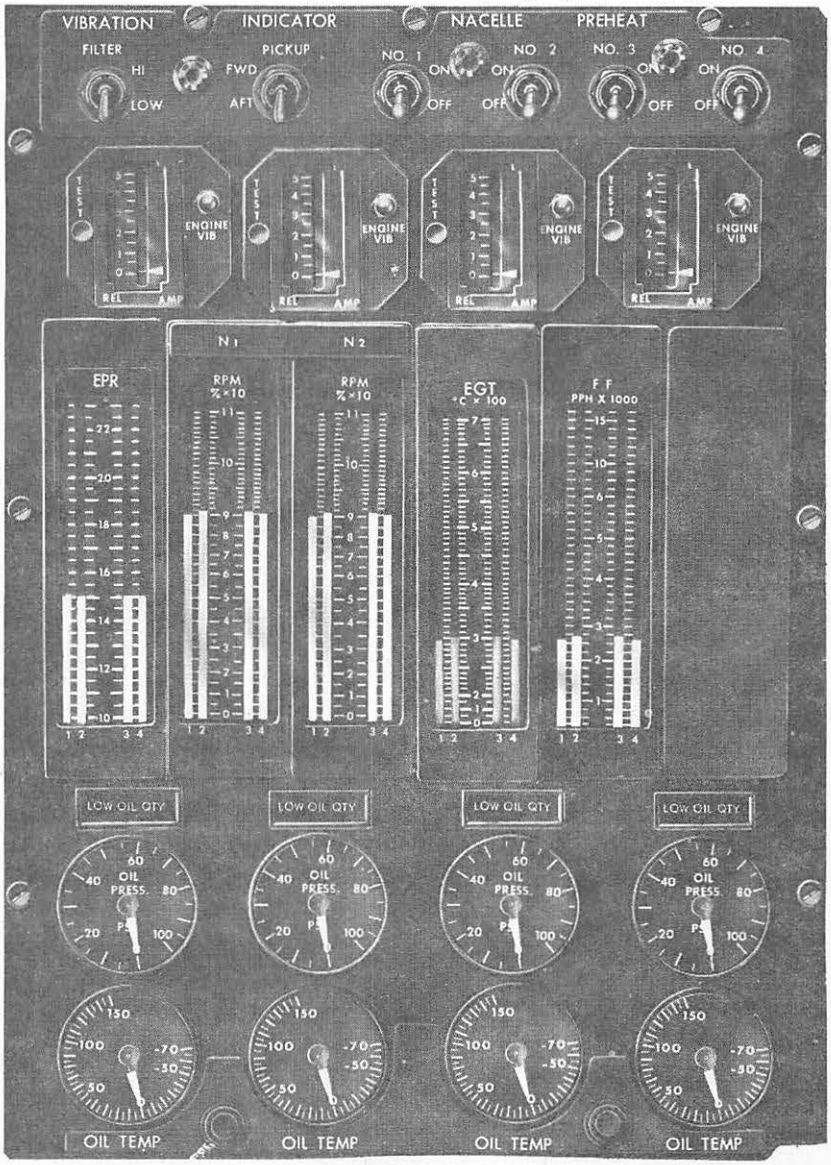

each instrument has a fuse, hence there are 16 fuses (except EPR)

ENGINE INSTRUMENTS

right forward under deck area is where instrument converter is

all VSEI's except EPR

one circuit breaker protects both pilots and engr's EPR guages

Fuel Flow Indicators

Two four-channel indicators, one for the pilots and one for the engineer are installed. A transmitter is mounted on the forward right side of the low compressor case.

Fuel flowing through the transmitter create signals which after being amplified by the converter unit, position the vertical tape. The tape is calibrated from 0 to 16000 pph.

Power supply and circuit breaker protection is the same as for the two proceeding instruments.

Engine Pressure Ratio Indicators

Two four-channel indicators are used in the engine pressure ratio indicating (EPR) system. These indicators show the ratio of engine turbine exhaust total pressure to compressor inlet total pressure. The EPR reading is used as a measure of engine thrust.

The converter-transmitter for each indicator is mounted in the engine pylon. There is an inlet pressure probe mounted on the inboard side of each pylon. Six exhaust pressure probes are mounted in the exhaust of each engine. Changes in pressures are sensed by these devices and transmitted to the indicator. The EPR indicator moving tape is marked from 1.0 to 2.3.

The 115 volt, 400 cycle, single phase AC power required by the EPR indicators is supplied by the Isolated AC Bus. There is an EPR circuit breaker for each engine.

VSEI Power OFF Warning

Each of the moving tapes in the VSEI indicators has a section of the tape colored red, which will come into view at the top of the indicator column should there be a power loss to that indicating system. The word OFF is printed on the red section of tape. With normal power to the indicator this red portion of the tape will be out of view.

if working off emergency gen, only VSEI instrument operational is EPR

Chapter 6

INSTRUMENT SYSTEMS

115 Volt AC Instruments

APU EGT Indicator

The APU exhaust gas temperature (EGT) indicator is located on the engineer's panel. The thermocouple type sensor is located in the APU exhaust. Power for this indicator comes from Essential AC Bus Nr 2. A power-off flag in the center of the instrument is visible anytime power is not present at the indicator.

Engine Vibration Indicators

The four engine vibration indicators are located on the engineer's engine instrument panel. On the same panel is located a filter switch and a pickup switch. There are two vibration pickup sensors per engine, one on the compressor case and one on the turbine case.

The filter and pickup switches are necessary for operation of these indicators. If the filter switch is moved to HI, high vibration frequencies are displayed on the indicators. In the LOW position, both high and low vibration frequencies are displayed. If the pickup switch is moved to AFT, turbine vibration frequencies are displayed. In the FWD position, compressor vibration frequencies are shown.

The vibration indicators use 115 volt, 400 cycle, single phase AC power from the Isolated AC Bus. The pickup selector circuits require 28 volt DC power from the Isolated DC Bus to operate the pickup selector relay.

Oxygen Quantity Indicators

A 25 liter liquid oxygen quantity indicator is located on the copilot's side console. This is a capacitance type indicator in which the indication is not affected by changes in density due to temperature variations. This indicator receives 115 volt AC power from the Essential AC Bus Nr 2.

Two 75 liter liquid oxygen quantity indicators form part of the troop oxygen system. They are located on the troop oxygen panel at station 868. These two indicators are also of the capacitance type. Power for these indicators is obtained from two separate buses. Indicator Nr 1 is supplied by Essential AC Bus Nr 1 and Indicator Nr 2 is supplied by Essential Bus Nr 2.

All three liquid oxygen quantity indicators have a push-to-test button located alongside. Depressing the test button causes the indicator to move counterclockwise as an operational check. If the indicator is driven far enough towards empty (2.5 liters crew system - 7.5 liters troop system), the LOW OXYGEN QUANTITY WARNING light will go ON.

Fuel Quantity System

The fuel quantity system provides both individual tank readings and total fuel quantity. There are ten tank indicators and one total fuel indicator. All indicators are located on the engineer's fuel management panel.

The fuel quantity indicators use capacitor type tank units and therefore measure fuel quantity in pounds rather than in gallons.

Each tank system contains the tank units, a density compensator and an indicator.

The system is essentially a bridge circuit which is unbalanced by the addition or subtraction of fuel in the tanks. Signals created by this unbalance are amplified within the indicator to power the indicator motor. As the indicating pointer reaches the proper fuel quantity reading the bridge is again balanced and motion stops until the next fuel level change.

The total fuel quantity indicator is connected to a potentiometer in each of the tank indicators. Whenever the tank indicator motor responds to a change in fuel level it also changes the potentiometer value, which in turn results in a change in total fuel quantity. If a tank indicator should become inoperative, the value of that potentiometer is still in the totalizer circuit and is affecting the total fuel quantity reading.

Power requirements for the fuel quantity indicating systems are 115 volts, 400 cycles, single phase AC power. The main tank indicators are supplied AC power from the Essential AC Bus Nr 1 through four circuit breakers on the engineer's circuit breaker panel. The totalizer, auxiliary tanks Nr 1 and Nr 4, and LH extended range indicators are supplied by the Main AC Bus Nr 1 through four circuit breakers on the engineer's circuit breaker panel. The Nr 2 and Nr 3 auxiliary tanks and the RH extended range indicators are supplied by Main AC Bus Nr 4 through three circuit breakers on the engineer's circuit breaker panel.

A push-to-test button is located next to each fuel quantity indicator except the total fuel indicator. Depressing the switch causes the indicator to drive towards zero. Each fuel quantity push-to-test button will also cause the fuel totalizer to rotate towards zero. When the switch is released, the fuel quantity indicator and the fuel totalizer will return to the proper fuel quantity reading. This is an operational check and not an accuracy check.

26 Volt AC Instruments

Fuel Pressure Indicator

There is one fuel pressure indicator on the engineer's fuel management panel. The transmitter for this indicator is located in the center wing dry bay area. The fuel pressure indicator can be used to ground check the output of individual fuel booster pumps by properly positioning the fuel crossfeed and separation valves.

Power for this indicator is supplied by 26 Volt AC Bus Nr 2.

Oil Pressure Indicators

The four oil pressure indicators are located on the engineer's engine instrument panel. The pressure transmitters are mounted on the main accessory section of each engine.

Power for Nr 1 and Nr 4 indicators is supplied by 26 Volt AC Bus Nr 1, and for Nr 2 and Nr 3 indicators by 26 Volt AC Bus Nr 2.

Brake Pressure Indicators

These two brake pressure indicators are located on the pilots' center instrument panel. One indicator shows normal brake system pressure and the other shows emergency brake system pressure. Operation of these indicators is dependent on the position of the brake selector switch. The proper indicator will show the pressure of the system selected.

The transmitters for these two indicators are located under the floor near the control columns.

The normal brake pressure indicator is powered by 26 Volt AC Bus Nr 1 and the emergency brake pressure indicator by 26 Volt AC Bus Nr 2.

Hydraulic Pressure Indicators

There are three hydraulic pressure indicators on the engineer's panel. They show Hydraulic System Nr 1, Nr 2, and Nr 3 pressures. The transmitters for these indicators are located in their respective hydraulic system service centers.

The Nr 1 and Nr 3 system indicators are powered by 26 Volt AC Bus Nr 1, while the Nr 2 system indicator is powered by 26 Volt AC Bus Nr 2.

Spoiler Position Indicator

The spoiler position indicator is a dual pointer indicator located on the pilots' center instrument panel. The "L" and "R" pointers show the CLOSED and GRD positions of their respective wing spoilers. The transmitters are in the wings and are driven by the inboard spoiler drive tubes.

In the center of the spoiler position indicator is a window that shows either an UNLKD or LOCKED indication. This portion of the indicator is operated by the spoiler actuator limit switches.

Power for the spoiler position indicator pointers comes from the 26 Volt AC Bus Nr 1. Power for the position window comes from the Main 28 Volt DC Bus Nr 1.

Manifold Bleed Air Pressure Indicator

The manifold bleed pressure indicator is located on the engineer's panel. The transmitter for this indicator is located in the duct leading from the cross-wing manifold to the cabin pressure outflow safety valve.

The 26 volt power for this indicator comes from the 26 Volt AC Bus Nr 2.

Regulated Bleed Air Pressure Indicator

The regulated bleed air pressure indicator is a dual pointer indicator. The "L" and "R" pointers show the pressure within their respective air conditioning systems. The indicator is located on the engineer's panel. The pressure probes are located in the primary heat exchanger outlet air ducting.

Power for this indicator is supplied by 26 Volt AC Bus Nr 1 ("L") and 26 Volt AC Bus Nr 2 ("R").

28 Volt DC Instruments

Engine Oil Temperature Indicators

The four engine oil temperature indicators are located on the engineer's engine instrument panel. The temperature sensors are located in the inlet line to the engine oil pump and show oil inlet temperature.

The DC power for Nr 1 and Nr 4 indicators is supplied by Main DC Bus Nr 1, while Nr 2 and Nr 3 indicators are powered by Main DC Bus Nr 2.

CSD Oil Temperature Indicators

The four constant speed drive (CSD) oil temperature indicators are located

on the engineer's panel. The temperature sensors measure the temperature of the oil as it leaves the CSD.

Power for Nr 1 and Nr 4 indicators is supplied by Main DC Bus Nr 1 and for Nr 2 and 3 indicators by Main DC Bus Nr 2.

The engine oil temperature indicators and the CSD oil temperature indicators share the same circuit breakers on the engineer's circuit breaker panel.

Fuel Temperature Indicator

The fuel temperature indicator is located on the engineer's fuel management panel. Directly above it is a switch marked: OUTBD and INBD. The temperature sensors are located in Nr 1 engine feed line and in Nr 2 engine feed line. If OUTBD is selected, the indicator shows the temperature of the fuel going to Nr 1 engine, while the INBD position shows Nr 2 engine fuel temperature.

Power for the fuel temperature indicator is furnished by Main DC Bus Nr 1 through Nr 1 engine CSD and engine oil temperature circuit breaker.

Primary Heat Exchanger Temperature Indicators

The two primary heat exchanger temperature indicators are located on the engineer's panel. They show the temperature of the left and right wing bleed air after it has passed through the heat exchangers. The temperature bulbs are located in the systems downstream from the heat exchangers.

The left hand indicator is supplied power by the Isolated DC Bus and the right hand indicator by the Main DC Bus Nr 2. In the event of power failure on either bus, the applicable emergency pressurization switch on the emergency power circuit breaker panel can be placed to the EMERG position. Now power will be supplied to the indicators by the Emergency DC Bus.

Cargo Compartment Temperature Indicator

The cargo compartment temperature indicator is mounted on the engineer's panel. The temperature sensor is located in the cargo compartment temperature control unit installed on the aft upper deck (hayloft), wherein a fan draws cargo compartment air over it.

Power for this indicator comes from Main DC Bus Nr 2.

Flap Position Indicator

The flap position indicator is located on the pilots' center instrument panel. The transmitter is driven by the flap drive gearbox. Calibration is from UP (zero percent) to DOWN (100 percent) with an increment at each 10 percent.

The wing flap indicator is supplied 28 volts DC power by the Main DC Bus Nr 1.

Landing Gear Position Indicators

The three type C-1 landing gear position indicators are located on the pilots' center instrument panel above the landing gear lever. A miniature wheel and tire indicates that the gear is DOWN, an UP marker indicates that the gear is UP, while a black and yellow striped flag indicates that the gear is not up or locked. Limit switches actuated by the gear movement operate the indicators.

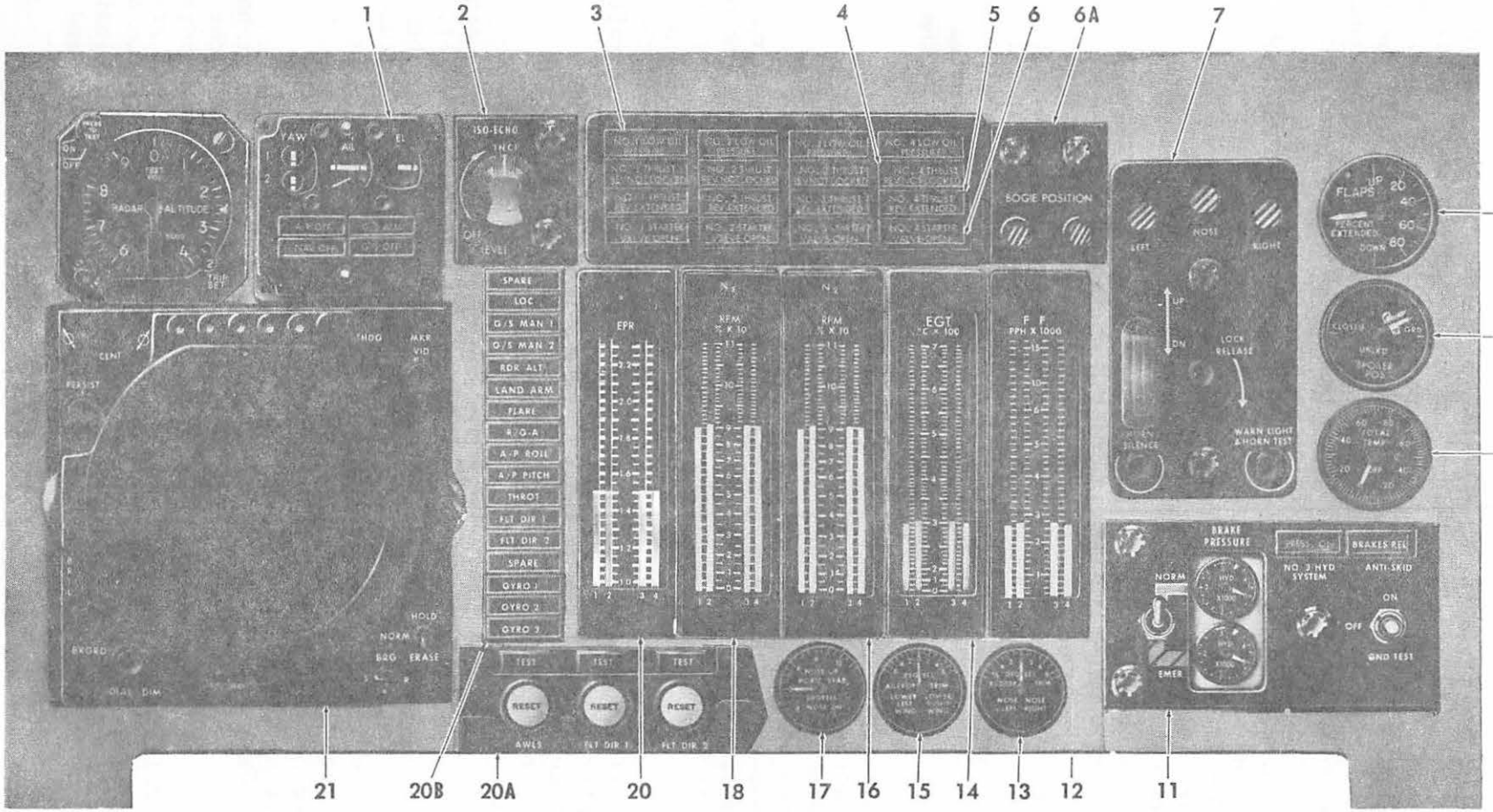

1. AFCS TRIM PANEL
2. ISO-ECHO SWITCH (INOPERATIVE ON AIRCRAFT AF61-2775 THROUGH 61-2779.
3. LOW OIL PRESSURE LIGHTS
4. THRUST REVERSERS NOT LOCKED LIGHTS
5. THRUST REVERSERS EXTENDED LIGHTS
6. STARTER VALVES OPEN LIGHTS
6A. BOGIE POSITION INDICATOR
7. LANDING GEAR PANEL
8. FLAPS POSITION INDICATOR
9. WING SPOILERS POSITION INDICATOR
10. TOTAL AIR TEMPERATURE INDICATOR
11. BRAKE PRESSURE AND ANTI-SKID PANEL
12. FUEL FLOW INDICATORS
13. RUDDER TRIM POSITION INDICATOR
14. EXHAUST GAS TEMPERATURE INDICATORS
15. AILERON TRIM POSITION INDICATOR
16. PERCENT OF RPM N_2 INDICATORS
17. HORIZONTAL STABILIZER TRIM POSITION IND.
18. PERCENT OF RPM N_1 INDICATORS
19. TAKE-OFF LIGHT
20. ENGINE PRESSURE RATIO INDICATORS
20A. AWLS AND FDS TEST PANEL
20B. AWLS FAULT IDENTIFICATION PANEL
21. AZIMUTH AND RANGE INDICATORS (PPI)
22. RADAR ALTIMETER (2)

PILOTS' CENTER INSTRUMENT PANEL

Power is furnished by the Isolated DC Bus.

Bogie Position Indicators

Two type C-1 bogie position indicators are on the pilots' center instrument panel. The miniature wheel and tire indicate that the associated bogie is in position for landing. At all other times, a black and yellow striped flag is visible to warn the pilot. Limit switches, actuated by bogie beam movement, operate these indicators.

The Isolated DC Bus powers the bogie position indicators.

Trim Position Indicators

The horizontal stabilizer trim position indicator is mounted on the pilots' center instrument panel. It is calibrated in degrees of stabilizer travel for aircraft nose-up and nose-down. The transmitter is mounted in the empennage. Power is supplied by the Main DC Bus Nr 1.

The aileron trim position indicator on the pilots' center instrument panel is calibrated in degrees for lower left wing and lower right wing. The transmitter is part of the aileron trim actuator. Power is furnished by Main DC Bus Nr 1.

The rudder trim position indicator also is on the pilots' center instrument panel. It is calibrated in degrees for nose left and nose right. The transmitter is part of the rudder trim actuator. Power comes from the Main DC Bus Nr 1.

Miscellaneous Instruments

Clocks

Four 8-day clocks are provided and are located on the pilot's, copilot's, engineer's and navigator's panels. These are spring operated clocks. They are wound by using the knob in the lower left corner. A sweep second hand and minute totalizer are provided with both being controlled by successive depressions of the START-STOP-RESET knob in the upper right corner.

Accelerometer

The self-contained accelerometer is located on the pilot's panel. The dial is calibrated from -2 to +4 Gs. One pointer indicates continuously the vertical "G" forces on the aircraft. The other hands indicate the maximum plus and minus vertical "G" forces exerted until they are reset by the knob in the lower left corner.

Cabin Altitude and Differential Pressure Indicators

There are two of these indicators, one on the copilot's panel and one on the engineer's panel. One pointer indicates cabin pressure altitude in feet and the other pointer indicates the pressure difference between aircraft and cabin altitudes in psi.

Cabin Rate of Climb Indicator

The cabin rate of climb indicator is located on the engineer's panel. It indicates the rate of pressure change in feet per minute as cabin altitude is moved up or down.

Direct Pressure Indicator

Each Hydraulic Service Center has a direct pressure reading indicator for system pressure. In addition, Hydraulic Service Center Nr 3 has a direct pressure indicator for each of the two 400 cubic inch accumulators. These indicators are mechanical instruments and require no electrical power.

Chapter 7

C-12 COMPASS SYSTEMS

Introduction

The C-12 Compass Systems provide an accurate heading reference at any latitude. The heading is displayed by the compass cards of the Horizontal Situation Indicators (HSI) and the Bearing Distance Heading Indicators (BDHI).

There are two independent C-12 Compass Systems on the C-141. Each system in addition to providing a visual heading indication, furnishes heading information to the systems listed below:

C-12 Compass System Nr 1

APN-147 Doppler Radar
VOR Nr 1
TACAN Nr 1
ASN-24 Navigational Computer
Navigator's BDHI Nr 1
Copilot's BDHI
Pilot's HSI
Flight Recorder

C-12 Compass System Nr 2

APN-59 Search Radar
VOR Nr 2
TACAN Nr 2
ASN-24 Navigational Computer
Navigator's BDHI Nr 2
Pilot's BDHI
Copilot's HSI
Autopilot

System Components

Both systems have the following components. A brief description of the function of each component is included.

Magnetic Azimuth Detector (Flux Valve)
Detects magnetic heading and drives directional gyro to magnetic heading of aircraft.

Remote Magnetic Compensator
This device compensates for three errors in the system. Index error, which is the misalignment of the Magnetic Azimuth Detector in relationship to the axis of the aircraft. Transmission error, which is electrical error within the servo loops. Coriolis error, which is an acceleration error caused by the detector swinging off from a level position as the aircraft flies a curved path to its destination.

Directional Gyro
Provides heading stabilization during magnetic operation and the basic heading reference during directional gyro operation.

Amplifier
Power distribution and amplification.

Digital Controller
Control and information point.

Horizontal Situation Indicator (HSI)
Displays heading information.

Bearing, Distance, Heading Indicators (BDHI)
Displays heading information.

Theory of Operation

When the C-12 Compass System is being used as magnetic compass, the magnetic azimuth detector senses the position of the aircraft in relationship to the earth's magnetic field. This signal is sent to the remote magnetic compensator where the various compensations modify the signal. Next the signal is sent to amplifier for comparison with the signal from the directional gyro.

If no difference exists the signal does not go any further. On the other hand, a difference in signals generates an error signal.

The error signal goes to the slaving amplifier which in turn drives the directional gyro to the magnetic heading of the aircraft. At the same time, the error signal shows up on the digital controller annunciator, which shows the direction of the misalignment.

As the directional gyro slaves around to the correct magnetic heading, at a rate of 1 to 2 degrees per minute, the reading on the controller changes until the directional gyro is aligned.

If the pilot desires to speed up the alignment, he can do so by means of the synchronizer knob on the controller, following the directions of the annunciator.

When in directional gyro operation, the heading correction signal is not applied to the directional gyro. The directional gyro remains fixed in space, and anytime the aircraft turns it moves in relation to this gyro. The difference between the gyro and the aircraft results in an electrical signal which causes the indicators to show the direction and amount of the turn.

Ground speed signals fed into the system by the APN-147 Doppler Radar are used to compensate for meridian convergence and for Coriolis Effect.

Digital Controllers

Before going into operation of the C-12 Compass, it will be necessary for the pilot to be familiar with the features of the digital controllers located on the copilot's side console and the navigator's panel since these devices control the systems.

Latitude N-S Switch
: Allows selection of north (N) or south (S) latitude correction, which depends on the position not direction of the aircraft.

Heading Indicator
: Provides a digital readout of the aircraft heading in 0.1 degree increments.

Annunciator
: Provides visual indication of system synchronization when the compass system begins initial operation in the magnetic mode.

Mode Switch
: Selects compass operation. When switch is at MAG, the directional gyro is slaved to the magnetic heading. The digital reading is the magnetic heading. If the switch is set to DG, the directional gyro is the heading reference. The digital reading is first set to the desired heading with the synchronizer knob and subsequent readings show the amount of turn from this heading.

Synchronizer Control
: Used for fast synchronizing during initial magnetic operation and for setting directional gyro heading during DG operation.

Power Adequacy Indicator
: A red light which comes ON if the voltage drops below 88 volts AC.

Latitude Knob
: Used to set in the correct latitude to compensate for the earth rate and Coriolis errors at the set latitude.

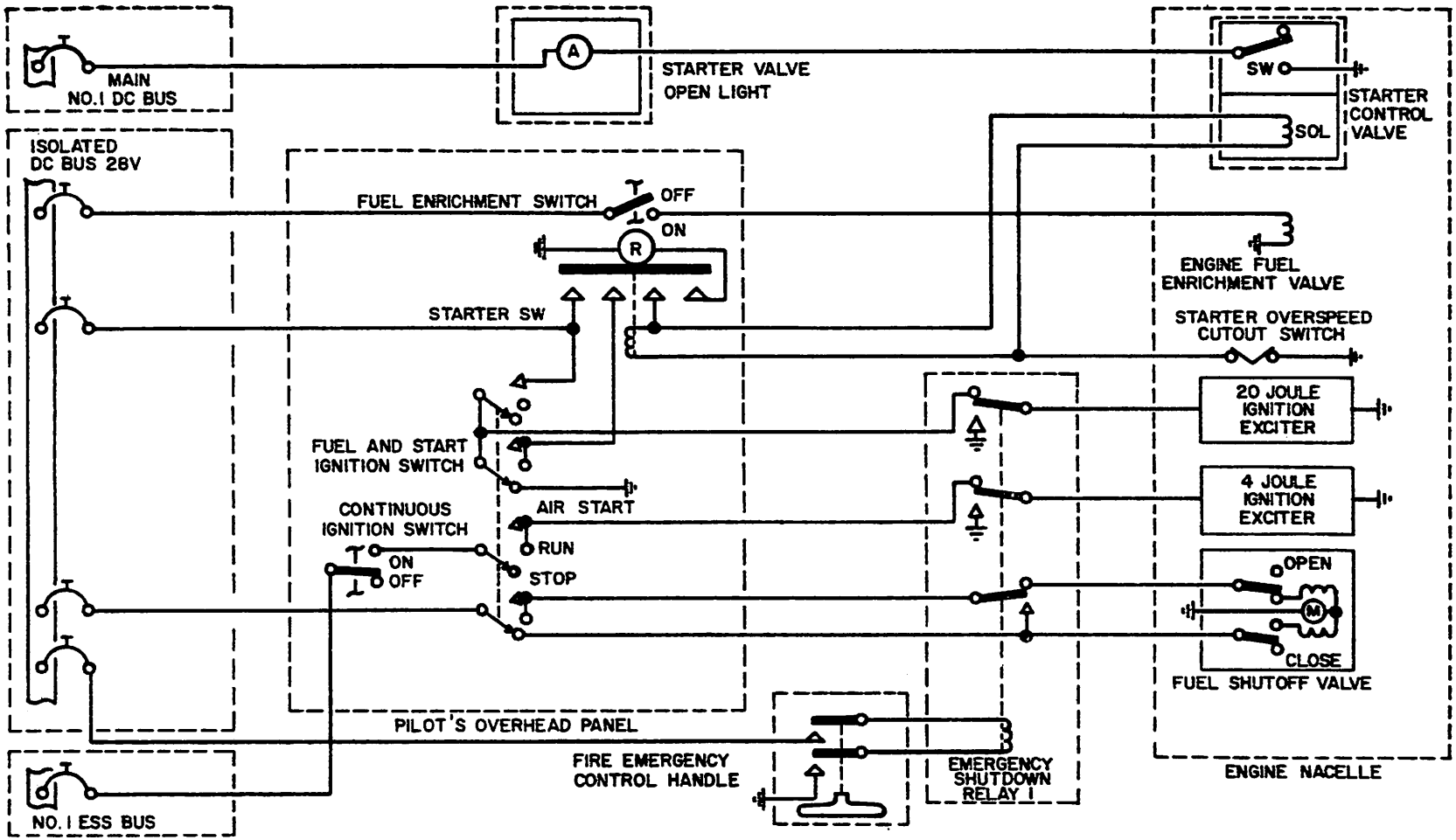

ENGINE STARTING SYSTEM SCHEMATIC

Chapter 4

THRUST REVERSER SYSTEM

Each engine is equipped with an independent thrust reverser system operated through the throttle quadrant. The system permits reverse thrust application of engine power after touch down and during rejected takeoff.

Each thrust reverser system consists of a hydraulic pump, filter, two actuators, two doors and a mechanical linkage, a control assembly, a flow regulator, a mechanical lockout and indicator lights.

Oil for actuation of the system is taken from the CSD oil tank. The oil is circulated through the thrust reverser system and then ported through the CSD oil cooler and back to the reservoir.

A dual element engine driven hydraulic pump provides hydraulic pressure for operation of thrust reverser system. The pump assembly consists of a high-volume pump, a low volume pump, an unloading valve, an unloading pilot valve and check valves. The high and low volume pumps are attached to a common shaft so both will operate at the same speed. Both are fixed displacement, gear-type pumping units. At idle speed, the high-volume pump will deliver approximately 5.5 gallons per minute at 2,500 psi. The low-volume pump will deliver one half of one gallon per minute at 3,000 psi. The unloading valve permits the high-volume pump output to be ported to a return line except during thrust reverser operation. This is to insure rapid operation of the thrust reverser doors. The output of the low volume pump is used to cool the system while the doors are in the closed and locked position.

The control assembly determines the system pressure and direction of flow for thrust reverser door operation.

Two hydraulic actuators are used to supply the force and motion necessary to retract and extend the target-type thrust reverser doors. The actuators are located at the top and bottom of the aft end of the nacelle. Both of the actuators operate both doors, and are connected to a common oil pressure source.

To monitor thrust reverser operation, there are three indicating lights per engine, a PRESSURE light located on the engineer's panel, a THRUST REVERSER NOT LOCKED light and a THRUST REVERSER EXTENDED light on the pilot's center instrument panel. The PRESSURE light will come ON when the pressure in the control assembly reaches approximately 1000 psi. The THRUST REVERSER NOT LOCKED light, located on the pilot's panel, will come ON at the first movement of the doors out of the locked position. The EXTENDED light will come ON when the doors have fully extended.

An interlock system is installed to prevent throttle movement below 19 degrees if the thrust reverser doors are not fully extended. The mechanical linkage going to the fuel control will be blocked until the thrust reverser doors are fully extended.

Chapter 5

ENGINE OIL SYSTEM

General

The engine is lubricated by a high-pressure oil system. Lubrication is provided for the engine bearings, bearing seals, and accessory drives. A synthetic lubricating oil is used. Each engine has its own oil tank, pressure and scavenge pumps, air-oil cooler, fuel-oil cooler, a rotary breather, and a breather pressurizing valve.

Oil Tank

The engine oil supply is contained in a saddle-type tank mounted on the upper right side of the fan case. The total volume of the tank is 7.77 U.S. gallons. Of this volume, 6.09 gallons is oil. The filler cap on each tank is positioned to prevent overfilling the tank. The tank is accessible for servicing through an access door on the upper right side of the forward cowling.

Low Oil Quantity Switch

A float switch is installed in each tank. When the quantity has decreased to the one gallon usuable level, the switch will close and a LOW OIL QUANTITY light on the flight engineer's instrument panel will illuminate. There is one warning light for each engine oil system.

Oil Pump

From the oil tank the oil gravity-flows to the oil pump. This pump is a single-stage, gear-type pump located in the main accessory drive gearbox. The pump contains both the pressure and main scavenge units which are separated by a center body. An oil pressure switch illuminates the LOW OIL PRESSURE light on the pilot's center instrument panel, when the pressure decreases to 33 psi.

Oil Filter

After passing through the pump, the oil is directed to the main oil filter located on the right side of the main accessory drive gearbox.

A bypass valve built into the filter permits the oil to bypass the filter in the event the screens become clogged. The bypass valve opens when the pressure differential across the filter is approximately 50 psi. This prevents interruption of the oil supplied to the engine bearings in the case of a clogged filter.

A pressure switch senses the differential across the filter to actuate the LOW OIL PRESSURE light on the pilot's center instrument panel.

A static check valve is installed in the filter to prevent the oil from flooding the bearing cavities when the engine is static.

Pressure Relief Valve

Downstream of the filter is a pressure relief valve. This valve limits the maximum pressure of the pressure oil system. The relief valve opens when pump output pressure is approximately 45 psi higher than pump inlet pressure. When open, the relief valve ports some of the oil back to the pump inlet.

Bearing Lubrication

Oil under pressure is sprayed onto the bearings through a series of nozzles. The amount of oil to each bearing is regulated by the size of the nozzle orifice. Small wire-mesh screens, located in each bearing oil supply line, provide final filtering action.

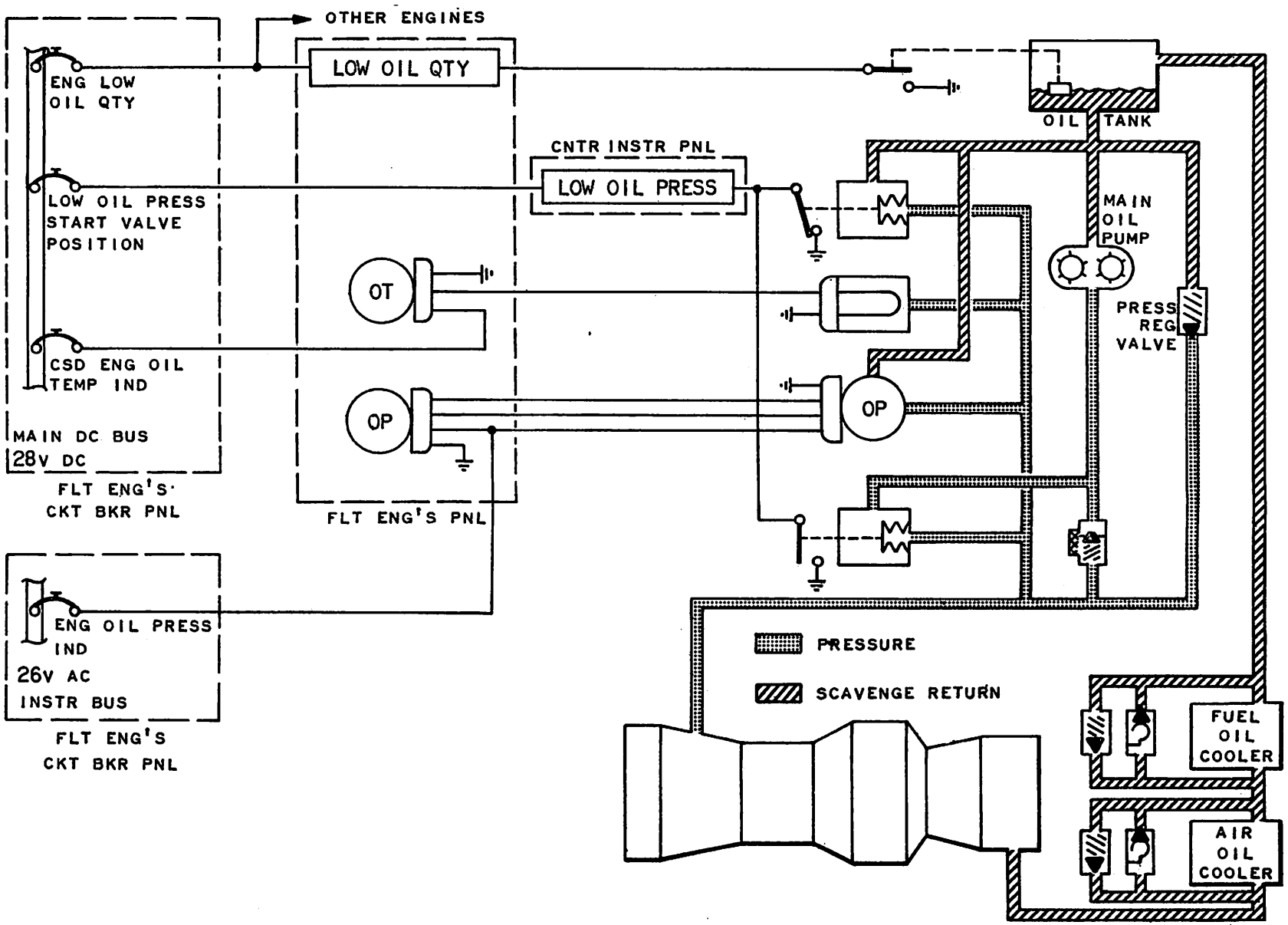

ENGINE OIL SYSTEM ELECTRICAL SCHEMATIC

Oil Scavenge System

For scavenging the oil, five gear-type pumps are located throughout the engine. Four of these pumps scavenge oil from the bearing compartments and return the oil to the accessory drive gearbox. The fifth pump, located in the accessory drive gearbox, returns the oil to the oil tank via the air-oil cooler and the fuel-oil cooler.

Air-Oil Cooler

After the oil leaves the scavenging pumps, it is directed to the air-oil cooler. The air-oil cooler is located on the right rear side of the fan duct. The cooler supplements the fuel-oil cooler to keep the temperature of the oil within the desired limits. The unit consists of a cooler and a temperature-pressure controller bypass valve.

Fuel-Oil Cooler

After the oil leaves the air-oil cooler, it enters the fuel-oil cooler. The fuel-oil cooler is located on the right side of the intermediate case. This unit consists of a cooler and a temperature-pressure controller bypass valve. The hot oil flows through the core and the cold fuel flows around the core.

Rotary Breather

Air from the compressor constantly leaks into all the bearing compartments. This air mixes with the spray from the oil pressure nozzles and becomes laden with oil. Breather system lines carry the oil vapor from the compartments to the main accessory drive gearbox. Before the air is vented overboard, the oil particles are removed by the rotary breather. The rotary breather is driven by the main accessory drive gearbox. The rotary breather revolves at high speed, separating the heavier oil particles from the air. The oil thus separated drains back into the gearbox. The air is then vented overboard through the breather pressurizing valve.

Breather Pressurizing Valve

The breather pressurizing valve is located on the rear face of the main accessory drive gearbox. It consists of an aneriod-operated valve and a spring-loaded relief valve. At sea level pressure the breather pressurizing valve is open. It closes gradually with increasing altitude and maintains an oil system pressure sufficient to assure oil flow similiar to sea level. Above 30,000 feet the valve is closed. A spring-loaded relief valve acts as a pressure relief for the entire breather system and will open only if the pressure differential is excessive.

Engine Oil Indicating System

To monitor the oil system operation, each engine has a LOW OIL QUANTITY warning light, an oil pressure indicator, and an oil temperature indicator on the flight engineer's panel. On the pilot's center instrument panel is located a LOW OIL PRESSURE light for each engine.

Chapter 6

ENGINE FUEL SYSTEM

General

The engine fuel system provides clean, vapor-free fuel to the fuel nozzles at pressures and flow rates required to develop the correct engine power for all operating conditions. The system compensates for variations in altitude during flight, limits the acceleration fuel flow to prevent "surging" and establishes a minimum fuel flow to prevent flameout of the engine during deceleration.

The engine fuel system consists of a dual element engine-driven pump, fuel heater, fuel filter, fuel shutoff actuator, fuel control, fuel flow transmitter, fuel oil cooler, pressurizing and dump valve, fuel nozzles, and pressure switches.

Fuel Inlet Pressure Switch

Fuel flows from the wing fuel tanks under pressure to the engines. The fuel passes through the manually operated firewall shutoff valve, through the engine feed line located on the pylon front beam, and into the engine.

Fuel pressure at the engine inlet is sensed by a pressure switch. The pressure switch controls the PRESS LOW warning light on the engineer's fuel management panel. One warning light is provided for each engine. In addition, the pressure switch also controls an ENGINE FUEL PRESS light on the annunciator panel. The lights come ON at 12 psia.

Fuel Pump

After the fuel passes the pressure switch, it enters the engine-driven fuel pump. The pump is a dual-element unit mounted on the left side of the main accessory drive gearbox. The two elements are driven by a common shaft. The first stage of the pump is an impellor assembly which acts as a boost pump for the second stage. A built-in bypass valve between the first and second stages bypasses fuel directly to the second stage in the event of a first stage malfunction.

The second stage of the engine-driven fuel pump is a positive displacement gear type pump. Fuel from the impellor stage, after passing through the fuel heater and filter assemblies, enters the gear stage through a second filter installed in the pump. A high-pressure relief valve relieves pump output pressure above a preset maximum.

Fuel Pump Out Warning System

Connected across the impellor stage of the engine-driven fuel pump is a differential pressure switch. This pressure switch controls the engine PUMP OUT light on the engineer's fuel management panel. One warning light is provided for each engine. If the output of the impellor stage decreases to 10 psid, the pressure switch will illuminate the warning light.

Fuel Deicer Heater

Fuel leaving the first stage is ported into the fuel heater through external tubing. The fuel deicing heater is mounted on the left side of the engine compressor case. The heater consists of an air chamber surrounded by a fuel jacket. Engine bleed air is circulated through the air chamber. The heat from the air is transferred to the fuel circulating in the fuel jacket. During engine operation all of the fuel from the first stage passes through the fuel heater. Airflow through the heater

is controlled by a motor-operated valve. The valve is controlled by the fuel heater switch on the engineer's fuel mangement panel. One switch is provided for each heater. A light above each switch illuminates when the valve opens.

Fuel Filter

Fuel leaving the fuel heater is directed into the fuel filter. The fuel filter is located on the left side of the compressor intermediate case. Should the filter become clogged a built-in bypass valve will bypass the fuel around the filter. During a clogged condition, differential pressure across the filter will increase. A pressure switch senses pressure differential across the filter. If pressure differenctial reaches 8 psi, the switch closes and illuminates the FIL BYPASS light on the engineer's fuel management panel. When the differential pressure reaches 12 psi, the bypass valve opens and the fuel flows around the filter. If the clogged condition relieves itself, the bypass valve will close and normal operation will resume.

Fuel Control

After leaving the filter, the fuel flows into the second stage of the engine-driven fuel pump. After leaving the second stage of the pump, the fuel flows through the fuel control.

The fuel control is a fuel flow metering unit which controls engine power under all operating conditions. Control is provided in both the forward and the reverse power ranges.

The control is an engine-driven, hydro-mechanical unit located on the forward right side of the main accessory gearbox. Two levers are provided on each fuel control. The power lever (throttle lever) is used for selecting engine thrust in the range from full reverse, through idle, to takeoff. The second lever is the electrically actuated shutoff lever which controls fuel for engine starting and shut down.

Also incorporated in the fuel control is a solenoid valve which provides fuel enrichment for cold weather starting.

The fuel control schedules fuel to the engine to control steady-stage rpm, to maintain a constant turbine inlet temperature for each position of the throttle; to prevent over-temperature and compressor "surging" during starting and acceleration; to prevent flameout during deceleration; and to reschedule for a change in ambient air pressure.

The fuel control accomplishes all of this by signals from the following sensors: a burner pressure sensor which reflects airflow in the combustion section of the engine, an RPM sensor which monitors speed of the N_2 compressor, the power lever angle sensor which reflects engine power requirements by throttle position and an ambient pressure sense.

The metered fuel leaves the fuel control through the fuel shut-off valve, which is controlled by the fuel and start ignition switch. Then to the fuel flow transmitter and fuel oil cooler on its way to the engine.

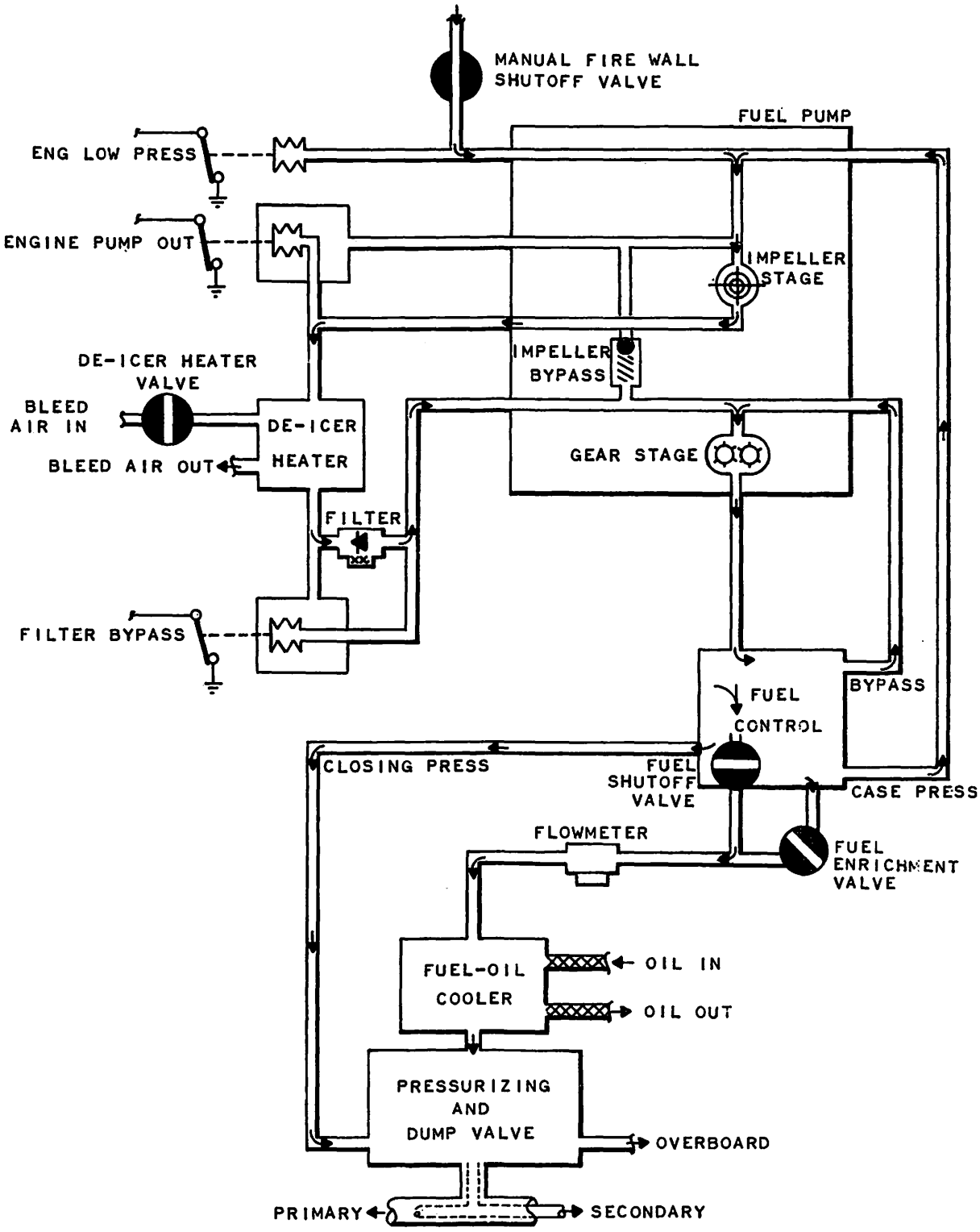

ENGINE FUEL SYSTEM SCHEMATIC

Pressurizing and Dump Valve

Fuel leaving the fuel-oil cooler flows into the fuel pressurizing and dump valve. This assembly consists of a fuel inlet check valve, a self-relieving filter, a manifold dump valve, and a pressurizing valve.

The fuel inlet check valve is located in the inlet port of the pressurizing and dump valve assembly. A fuel inlet pressure of eight to ten psi is required to open the inlet check valve. The valve prevents fuel from draining overboard from the fuel-oil cooler when the engine is not operating.

The pressurizing and dump valve is divided into primary and secondary chambers. The fuel manifold feeding the fuel nozzles has primary and secondary manifolds. The primary chamber of the pressurizing and dump valve flows fuel into the primary manifold for engine starting and low power operation. As the engine is accelerated, the fuel pressure increases. At a predetermined pressure, the pressurizing valve opens allowing fuel flow into the secondary chamber and secondary fuel manifold.

The manifold dump valve is spring-loaded open and closed by fuel pressure. When the engine is shut down, the dump valve opens, draining the primary and secondary fuel manifold overboard.

Fuel Enrichment

Fuel enrichment is used with JP-5 fuel only during ground engine starts with low fuel temperatures, or during air starts at high altitudes with JP-5 fuel.

When the fuel enrichment switch on the pilot's overhead panel is actuated, extra fuel bypasses the computer section of the fuel control for easier engine starting. The system cuts off automatically when the fuel flow reaches 1500 pounds per hour after engine starting.

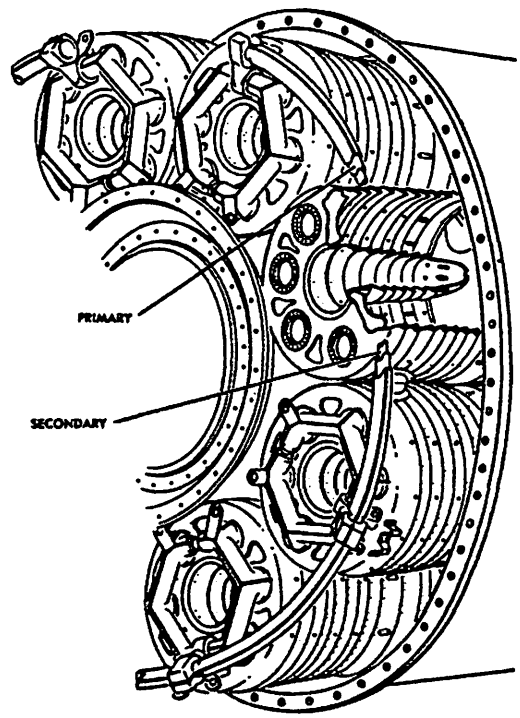

FUEL MANIFOLD

Chapter 7

ENGINE OPERATING LIMITS

TF33-P-7 **FUEL GRADE JP-4**

OPERATING CONDITION		OPERATING LIMITS		
THRUST SETTING	(MINUTES)	MAXIMUM OBSERVED EXHAUST GAS TEMPERATURE (°C) (2)	OIL PRESSURE (PSIG) NORMAL (4)	MAXIMUM OIL TEMPERATURE (°C) (3)
TAKE-OFF GO AROUND	5	555	40-55	121
MILITARY	30 (6)	510	40-55	121
NORMAL RATED	CONTINUOUS (5)	488	40-55	121
IDLE	CONTINUOUS	340 (1)	35 MINIMUM	121
STARTING	-	455	---	-
ENGINE ACCELERATION		555	40-55	121

(1) THIS TEMPERATURE IS NOT A LIMIT. IT IS GIVEN AS A GUIDE TO INDICATE THE EGT, WHICH, IF EXCEEDED, MAY SIGNIFY AN ENGINE MALFUNCTION. THE EGT LIMITS FOR THROTTLE SETTINGS BELOW NORMAL RATED THRUST ARE THE SAME AS THE TEMPERATURE LIMIT FOR NORMAL RATED THRUST.

(2) WHENEVER THE EGT EXCEEDS 565°C FOR ANY TIME, EITHER THE ENGINE SHOULD BE SHUT DOWN OR A LANDING SHOULD BE MADE AS SOON AS POSSIBLE. WHEN SHUTTING THE ENGINE DOWN FOR THIS REASON, ALLOW A COOLING PERIOD OF 5 MINUTES AT IDLE PRIOR TO SHUTDOWN IF ENGINE CONDITIONS AND FLIGHT CIRCUMSTANCES PERMIT.

(3) PROVIDING ENGINE OPERATION IS OTHERWISE NORMAL, NO MINIMUM OIL INLET TEMPERATURE NEED BE OBSERVED BEFORE COMMENCING TAKE-OFF.

(4) THE MINIMUM OIL PRESSURE AT IDLE IS 35 PSI. NORMAL OIL PRESSURE LIMITS FOR CONTINUOUS ENGINE OPERATION AT POWER SETTING ABOVE IDLE RPM IS 40 TO 55 PSI. OIL PRESSURE (ABOVE IDLE RPM) FROM 35 TO 40 PSI AND 55 TO 60 PSI ARE UNDESIRABLE AND SHOULD BE TOLERATED ONLY FOR THE COMPLETION OF THE FLIGHT PREFERABLY AT A REDUCED THROTTLE SETTING. OIL PRESSURE BELOW 35 PSI OR ABOVE 60 PSI IS UNSAFE AND REQUIRES THAT THE ENGINE BE SHUTDOWN OR A LANDING BE MADE AS SOON AS POSSIBLE, USING MINIMUM THRUST REQUIRED TO SUSTAIN FLIGHT.

(5) ANY POWER SETTING ABOVE NRT WILL BE LIMITED TO 30 MINUTES.

(6) ANY POWER SETTING ABOVE MRT WILL BE LIMITED TO 5 MINUTES.

C-141 HYDRAULICS

Section 5

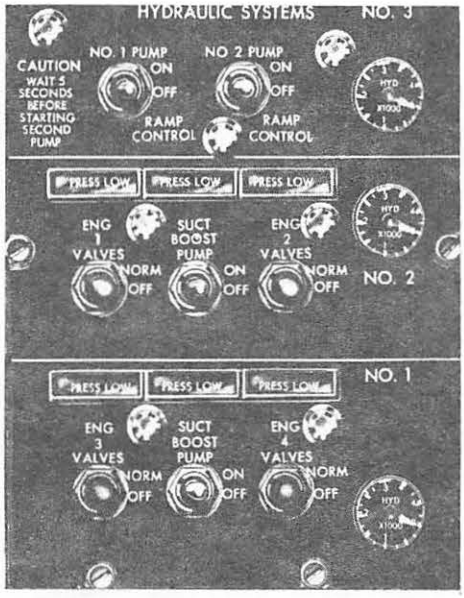

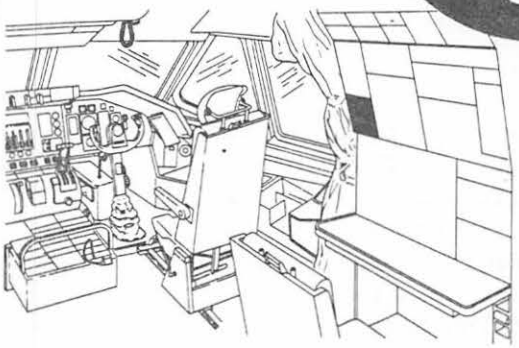

TABLE OF CONTENTS

Chapter 1

HYDRAULIC SYSTEMS GENERAL

The C-141 hydraulic system consists of four separate and functionally independent systems designated as: Systems Nr 1, 2, 3, and Nr 4 which is identified as the nose landing gear emergency extension system.

Each system is divided into a hydraulic power system and the subsystems to which power is delivered. MIL-H-5606 type fluid is used. Each of the four hydraulic systems have a service center where the individual system components are located.

The hydraulic systems control and indicator panel is located on the lower left corner of the flight engineer's panel.

Hydraulic System Nr 1

Reservoir

The reservoir is on the Nr 1 service center located on the right wall of the cargo compartment at the center wing section. The fluid capacity is 2.4 US gallons and it can be serviced in flight. A sight gage on the side of the reservoir is calibrated full and refill for zero psi and 3000 psi conditions. The reservoir is non-pressurized and vented through a filter to the cargo compartment. Baffling on the inside prevents direct flow of fluid from the system return to the outlet port.

Electric Driven Suction Boost Pump

The suction boost pump located near the reservoir consists of a housing, centrifugal impeller and 115 volt 3 Ø AC electric motor. The impeller is driven at a constant speed and is controlled by a 28 volt DC switch on the hydraulic systems control and indicator panel. It is normally turned on before engine start and remains on until after engine shutdown.

The suction boost pump provides a constant flow of fluid from the reservoir to the inlet port of the engine driven pumps. The pressure range of the suction pump is 100 psi maximum. Two way restrictors bypass 6/10 gpm for cooling and lubrication.

Low Pressure Warning Switch

The low pressure 28 volt DC warning switch set at 25 ± 5 psi is connected to the suction line below the suction boost pump. The yellow PRESS LOW warning light located on the hydraulic systems control and indicator panel will be out when suction line pressure is within operating range, and will come on when pressure drops below the operating range.

Ground Test Connections

Two ground test connections (suction and pressure) are located in the forward inboard portion of the right gear pod for a hydraulic ground test stand.

Priming Check Valve

The priming check valve downstream of the suction boost pump prevents fluid siphoning when a component is removed. It also prevents gravity flow of fluid back to the reservoir when the system is turned off. This insures that lubricating fluid will be available at the engine pump for the next start.

Supply Shutoff Valves

The motor operated gate type shutoff valves in each engine driven pump supply line control fluid flow to each individual engine driven pump.

The valve, mounted in the wing leading edge above Nr 3 and Nr 4 engine pylons, is controlled by the ENG VALVES switch on the flight engineer's hydraulic control panel and is normally open before engine start. It can be closed by three different means: the ENG VALVES switch, fire emergency handle, or manually positioning the power off lever on the side of the valve. This lever is for ground maintenance only; it cannot be reached in flight.

Engine Driven Pressure Pumps

Two engine driven, variable volume, nine piston, high pressure pumps are

HYDRAULIC SYSTEM DISTRIBUTION

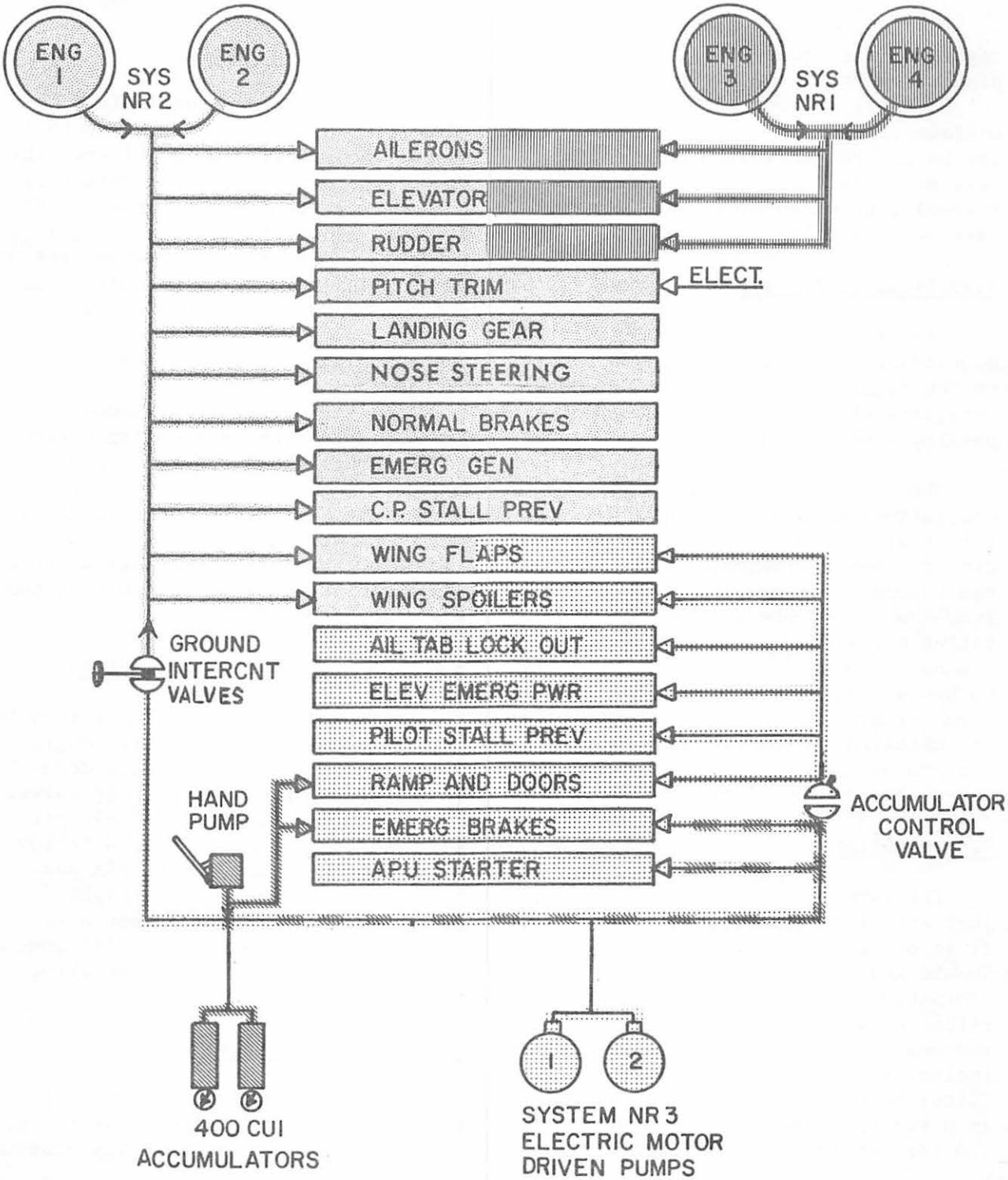

mounted on the accessory gear box drive of engines Nr 3 and Nr 4. The pumps are connected in parallel and provide hydraulic requirements for system Nr 1.

The compensator within the pumps regulates the pressure and volume depending on system requirements. Normal pressure is 3000 ± 150 psi with a maximum pressure 3400 psi for each pump. The pumps are lubricated internally by case drain return fluid (run around system) controlled by a 2 to 3 psi bypass valve and the 20 psi relief valve.

High Pressure Filters

High pressure filters are installed downstream of the engine driven pumps on the right side of the engine accessory section, to prevent contaminates passing from the pumps into the system.

Should the filter element become obstructed, a pressure drop across the filter will occur. If the pressure drop reaches approximately 70 psid, a red (clogged filter) indicator extends from the top of the filter body, indicating the filter must be removed and cleaned as soon as possible. There is no bypass relief valve in the high pressure filters. An identical type filter is installed in the pressure side of the ground test connection forward inboard side of the right gear pod.

Return Filter

The return line filter, located just aft of the reservoir, filters the fluid before it enters the reservoir. Should the filter element become contaminated, a pressure drop across the filter occurs. If the pressure drop reaches 70 psid, a red (clogged filter) indicator extends from the top of the filter body. Should the element become so dirty that the pressure drop reaches 100 psid an internal relief or bypass valve will open and allow return fluid to enter the reservoir unfiltered. Any time the indicator is extended the filter element must be removed, cleaned and reinstalled as soon as possible.

Case Drain Return Filter

The case drain return filter is installed in the case drain return line beside the system return filter. This filter is identical to the system return filter with the exception of the size and flow volume. The red (clogged filter) indicator extends when pressure drop across the filter reaches 28 psid and the bypass opens at 40 psid.

Pump Pressure Shutoff Valves

This is a solenoid actuated valve installed in each pump pressure line in the wing leading edge above Nr 3 and Nr 4 engine pylons. It is spring loaded open and electrically closed, and is controlled by the ENG VALVES switch on the flight engineer's panel and can also be CLOSED by pulling the emergency fire handles.

Pump Low Pressure Warning Switch

The low pressure warning switch is located above each respective engine pod in the wing leading edge, downstream of the pressure shutoff valve. The switch is set at 1350 ± 150 psi and operates a pump PRESS LOW yellow light on the flight engineer's hydraulic control panel. The light remains off as long as pressure is within operating range and will come ON when pressure drops below operating range.

Isolation Check Valve

A check valve is located in the leading edge of the wing above the pylon downstream of the pump low pressure

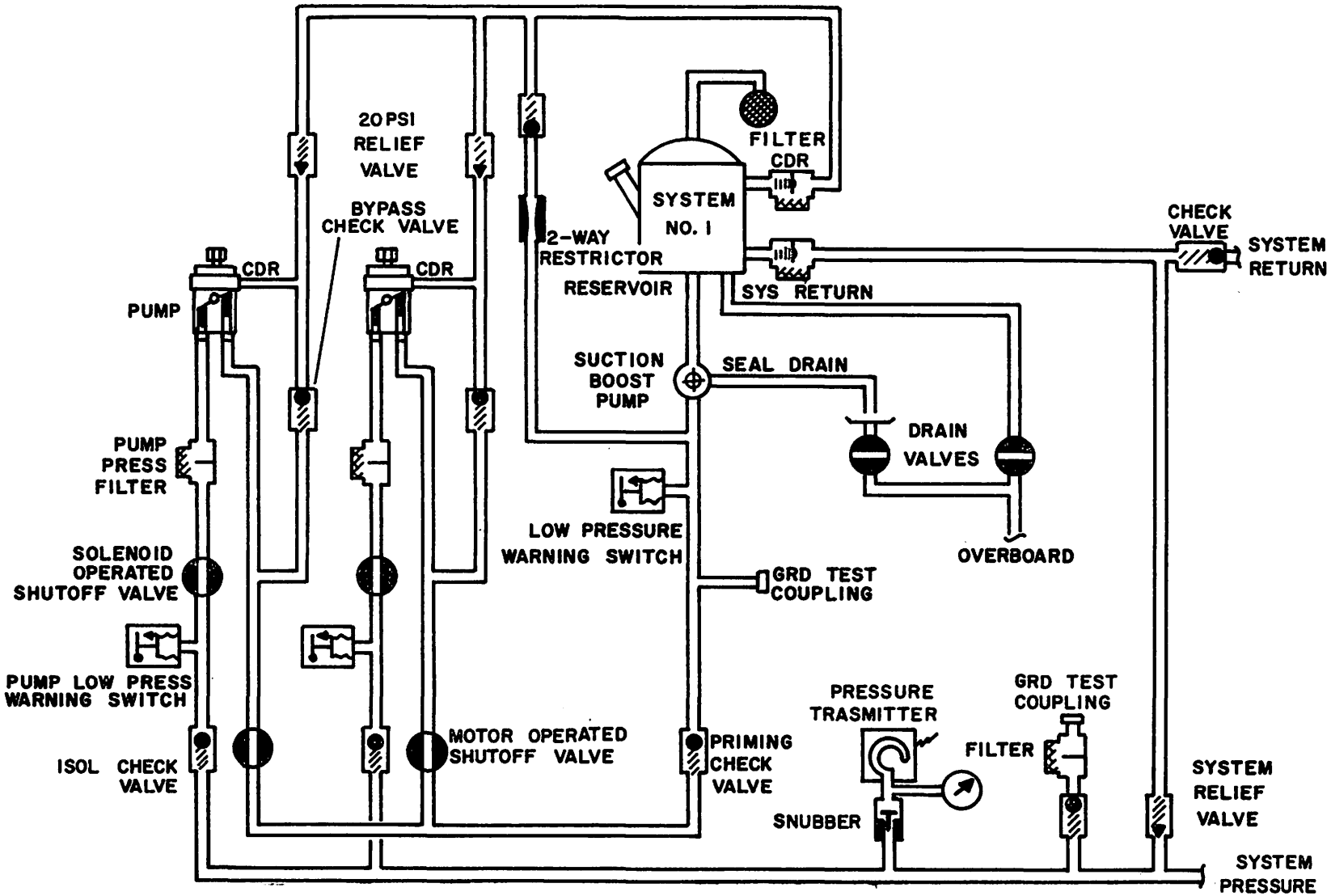

NO. 1 POWER SECTION HYDRAULIC SCHEMATIC

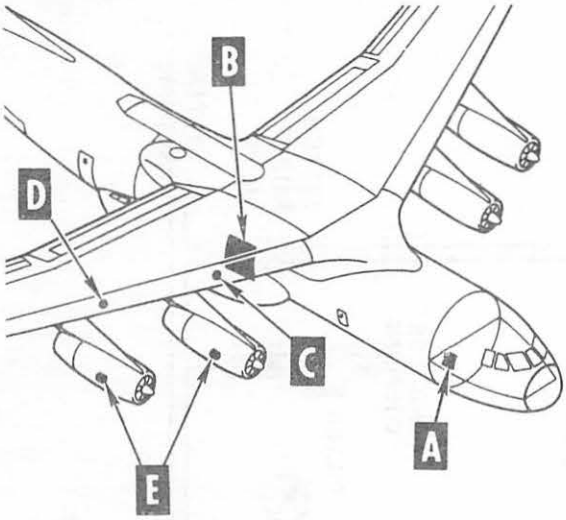

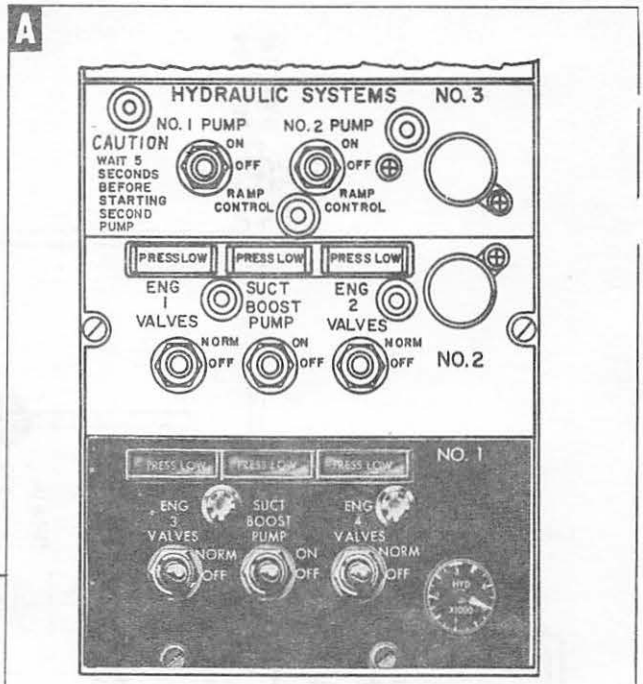

HYDRAULIC SYSTEMS CONTROL PANEL

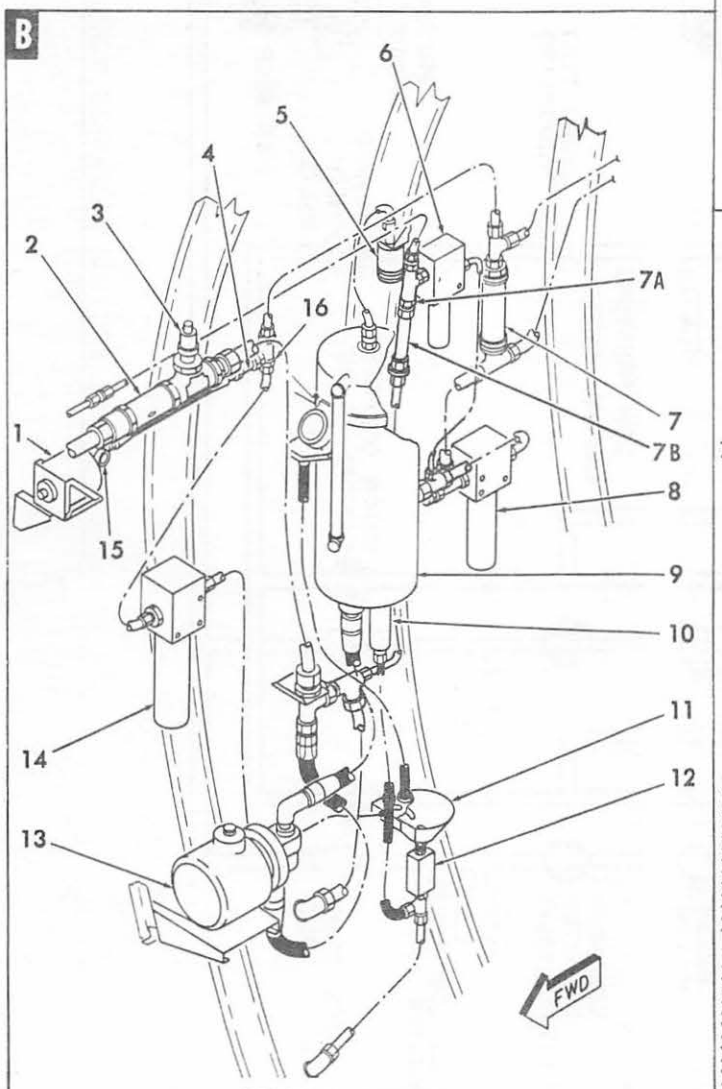

SERVICE CENTER

1. PRESSURE TRANSMITTER
2. CHECK VALVE
3. LOW PRESSURE WARNING SWITCH
4. SNUBBER
5. RESERVOIR VENT FILTER
6. CASE DRAIN RETURN FILTER
7. SYSTEM RELIEF VALVE
7A. CHECK VALVE
7B. FLOW REGULATOR
8. MAIN SYSTEM RETURN FILTER
9. SYSTEM RESERVOIR
10. RESERVOIR DRAIN VALVE
11. DRIP PAN
12. DRAIN VALVE
13. SUCTION BOOST PUMP
14. GROUND TEST LINE FILTER
15. PRESSURE GAGE
16. CHECK VALVE
17. ENG NO. 3 PUMP LOW PRESSURE WARNING SWITCH
18. ENG NO. 3 PUMP CASE DRAIN RELIEF VALVE
19. ENG NO. 3 PUMP PRESSURE SHUTOFF VALVE
20. ENG NO. 3 PUMP SUPPLY SHUTOFF VALVE
21. ENG NO. 4 PUMP SUPPLY SHUTOFF VALVE
22. FROM ENG NO. 3 PUMP PRESSURE CHECK VALVE
23. ENG NO. 4 PUMP PRESSURE CHECK VALVE
24. ENG NO. 4 PUMP LOW PRESSURE WARNING SWITCH
25. ENG NO. 4 PUMP CASE DRAIN RELIEF VALVE
26. ENG NO. 4 PUMP PRESSURE SHUTOFF VALVE
27. BYPASS LINE QUICK DISCONNECT
28. SUCTION LINE QUICK DISCONNECT
29. PRESSURE LINE QUICK DISCONNECT
30. PRESSURE LINE
31. PRESSURE LINE FILTER
32. PUMP SUCTION LINE
33. HIGH PRESSURE HYDRAULIC PUMP
34. PUMP BYPASS LINE

Hydraulic System No. 1 Components Locations

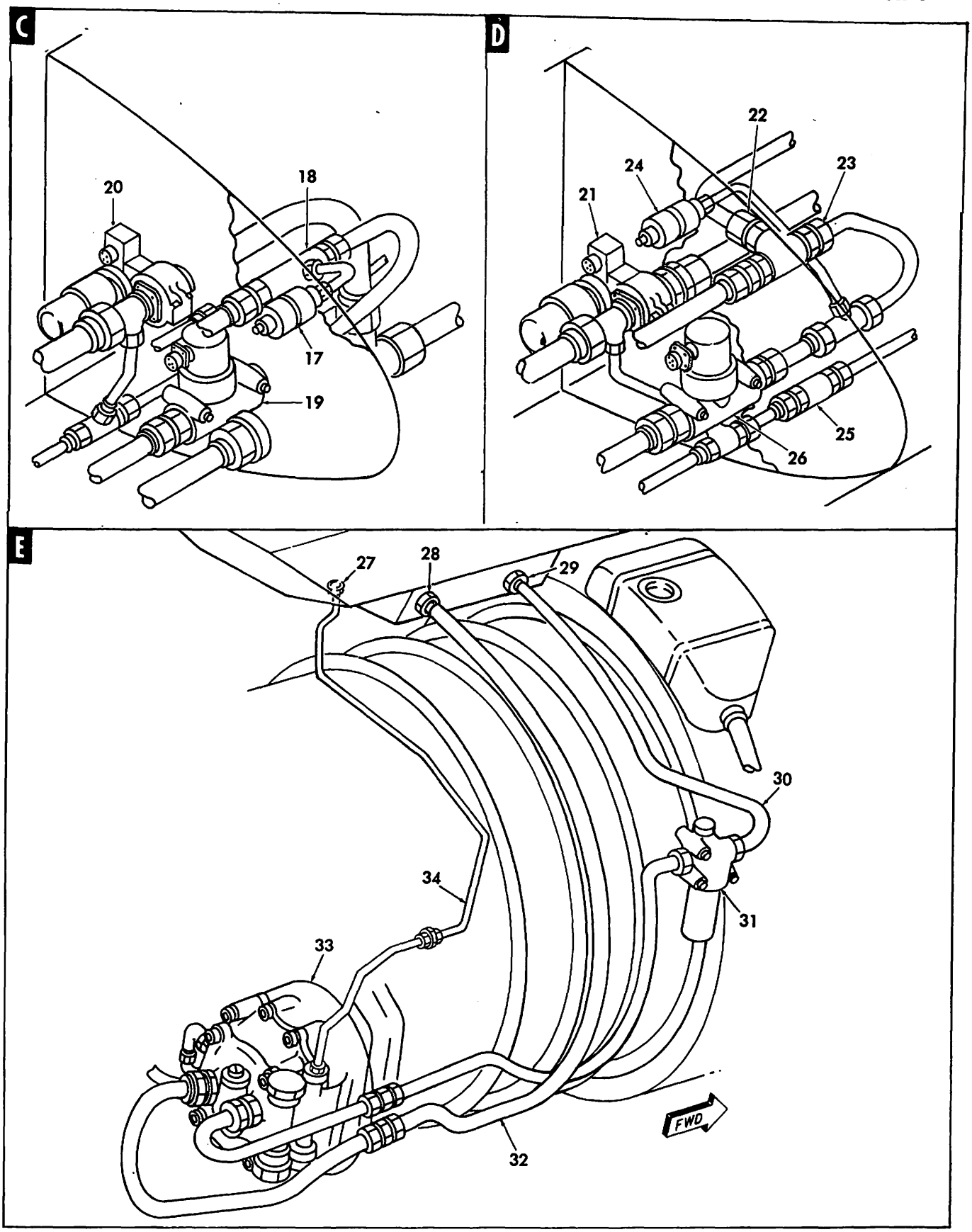

Hydraulic System No. 1 Components Locations

warning switch. Its purpose is to prevent reverse flow through an inoperative pump and prevent the pressure switch on one engine from being actuated when the engine is not operating.

Pressure Transmitter

The pressure transmitter is a bourdon-tube type located on the service center. It operates a 26 volt AC pressure gage on the flight engineer's hydraulic control panel. The pressure gage is calibrated in increments of 250 psi from 0 to 4000 psi. There is also a direct reading pressure gage located on the service center in the cargo compartment.

System Relief Valve

The relief valve is located on the service center to protect the system from excessive pressure in the event the engine driven pumps fail to compensate. One port of the valve is connected to system pressure and one to return. Should pressure reach 3560 psi, the valve will open and pump output will flow back to the reservoir. Once this valve is open, pressure must drop to approximately 3150 psi before it will reseat.

Hydraulic System Nr 1 Pressure Usage

Hydraulic System Nr 1 supplies pressure to:

1. Ailerons
2. Elevators
3. Rudder

Hydraulic System Nr 2

Reservoir

The reservoir is on the Nr 2 service center located on the left wall of the cargo compartment near the center wing section and can be serviced in flight. The fluid capacity is 4.2 US gallons with landing gear down and 5.0 US gallons with gear up. When the landing gear is in the UP position, the fluid level will be above the filler neck. The landing gear should be in the DOWN position before servicing it in flight. A sight gage on the side of the reservoir is calibrated FULL LG UP, FULL LG DN, REFILL LG UP, and REFILL LG DN.

The reservoir is non-pressurized and vented through a filter to the cargo compartment. It also has a dual check valve to prevent overflow of fluid in the event the reservoir overfills during ground checkout when Nr 2 and Nr 3 hydraulic systems are interconnected. The check valve also prevents fast escape through the vent when the landing gear is in travel to the UP position. The reservoir has baffling on the inside to prevent direct flow of fluid from the system return to the outlet port.

Electric Driven Suction Boost Pump

The suction boost pump is located below the reservoir. It consists of a housing, centrifugal impeller and 115 volt 3 Ø AC electric motor. The impeller is driven at a constant speed and controlled by a 28 volt DC switch on the hydraulic systems control and indicator panel. It is normally turned on before engine start and remains on until after engine shutdown.

The suction boost pump provides a constant flow of fluid from the reservoir to the inlet port of the engine driven pressure pumps. The supply pressure range of the suction pump is 100 psi maximum. Two way restrictors bypass 6/10 gpm for cooling and lubrication.

Hydraulic Driven Suction Boost Pump

The hydraulic motor-driven suction boost pump is mounted to the bottom of the reservoir. The motor consists of a nine piston assembly which drives a vane type suction boost pump. There is no ON-OFF control switch for the motor; it will operate anytime the Nr 2 system is pressurized. It assists the electric driven suction boost pump during peak loads and takes over if the electric driven suction boost pump fails. There is no individual indicator light on the hydraulic systems control and indicator panel for the hydraulic driven suction boost pump. It uses the same low pressure warning system as the electric driven suction boost pump.

When the pressure from the engine-driven pressure pump reaches approximately 500 psi, the hydraulic motor section of the pump begins to turn the boost section, and flow starts toward the inlet side of the engine-driven pump. As flow decreases, pressure increases until the pressure is approximately 100 psi. As system demand causes a flow, the pressure is decreased and the cycle starts again.

Ground Test Connections

Two ground test connections (suction and pressure) are located on the fuselage skin inside the left gear pod for a hydraulic ground test stand.

Hydraulic System Nr 2 Pressure Usage

Hydraulic System Nr 2 supplies pressure to:

1. Ailerons
2. Elevators
3. Rudder
4. Pitch Trim
5. Landing Gear
6. Nose Steering
7. Normal Brakes
8. Emergency Generator
9. Copilot's Stall Prevention
10. Wing Flaps
11. Wing Spoilers

Emergency Generator System

This system consists of an AC-DC generator driven by a hydraulic motor. It is located on Nr 2 service center aft of the reservoir and controlled by a solenoid operated hydraulic valve. A flow control valve maintains a constant hydraulic flow to hold generator speed at approximately 12,000 rpm.

Normally, the operation of the emergency generator system is automatic. The solenoid operated valve is energized closed with normal electric power on. If normal power is lost, the solenoid valve is de-energized and Nr 2 hydraulic pressure drives the generator motor.

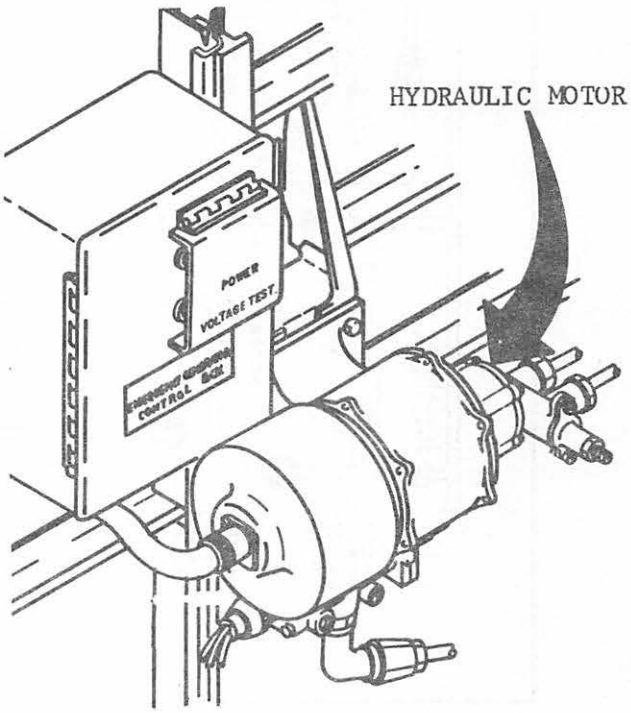

Emergency Generator

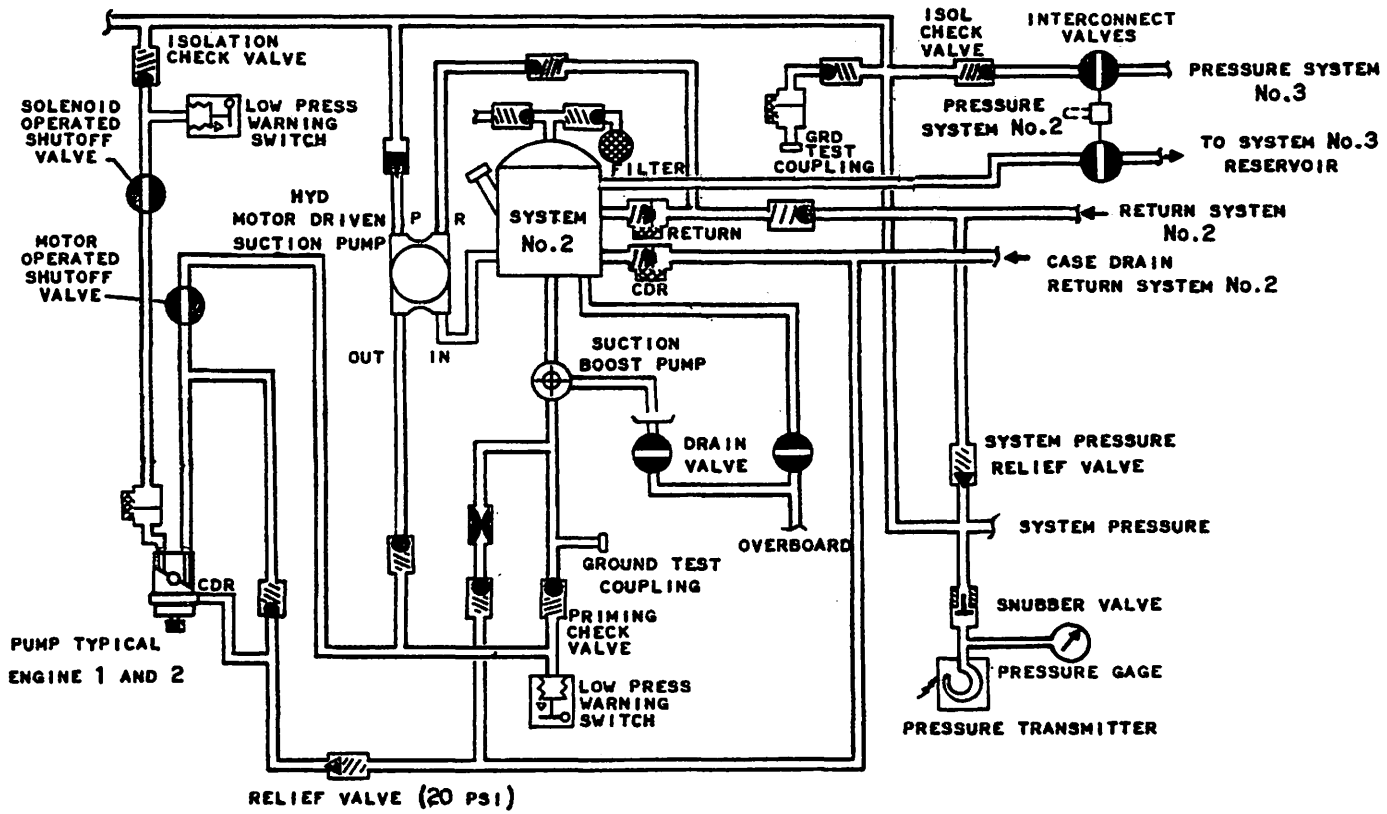

NO. 2 POWER SECTION HYDRAULIC SYSTEM

Priming Check Valve

The priming check valve downstream of the suction boost pump prevents fluid siphoning when a component is removed. It also prevents gravity flow of fluid back to the reservoir when the system is turned off. This insures that lubricating fluid will be available at the engine pump for the next start.

Low Pressure Warning Switch

The low pressure 28 volt DC warning switch set at 25 ± 5 psi is connected to the suction line below the suction boost pump. The yellow PRESS LOW warning light located on the flight engineer's hydraulic systems control panel will be out when suction line pressure is within operating range, and will come ON when pressure drops below the operating range.

Supply Shutoff Valves

The motor operated gate type shutoff valves in each engine driven pump supply line, controls fluid flow to each individual engine driven pump.

The valve, mounted in the wing leading edge above each engine pylon, is controlled by the ENG VALVES switch on the flight engineer's hydraulic control panel and is normally open before engine start. It can be closed by three different means: the control switch, fire emergency handle, or manually positioning the power off lever on the side of the valve. This lever is for ground maintenance only; it cannot be reached in flight.

Engine Driven Pressure Pumps

Two engine driven, variable volume, nine piston high pressure pumps are mounted on the accessory gear box drive of engines Nr 1 and Nr 2. The pumps are connected in parallel and provide hydraulic requirements for system Nr 2.

The compensator within the pumps regulates pressure and volume depending on system requirements. Normal pressure is 3000 ± 150 psi with maximum pressure 3400 psi for each pump.

Pumps are lubricated internally by case drain return fluid (run around system), controlled by a 2 to 3 psi bypass valve and the 20 psi relief valve.

Pump Pressure Shutoff Valves

This is a solenoid actuated valve, installed in each pump pressure line in the wing leading edge above Nr 1 and Nr 2 engine pylons. It is spring loaded open and electrically closed, and is controlled by the ENG VALVES switch on the hydraulic systems control and indicator panel, and can also be CLOSED by pulling the emergency fire handles.

Pump Low Pressure Warning Switch

The low pressure warning switch is located above each respective engine pylon in the wing leading edge, downstream of the pressure shutoff valve. The switch is set at 1350 ± 150 psi and operates a pump PRESS LOW yellow light on the hydraulic systems control and indicator panel. The light remains off as long as pressure is within operating range, and will come ON when pressure drops below operating range.

Isolation Check Valves

A check valve is located in the leading edge of the wing above the pylon downstream of the pump low pressure warning switch. Its purpose is to prevent reverse flow to an

inoperative pump and prevent the pressure switch on one engine from being actuated when the engine is not operating.

Pressure Transmitter

The pressure transmitter is a bourdon-tube type located on the service center. It operates a 26 volt AC pressure gage on the hydraulic systems control and indicator panel. The pressure gage is calibrated in increments of 250 psi from 0 to 4000 psi. There is a direct reading pressure gage located on the service center in the cargo compartment.

System Relief Valve

The relief valve is located on the service center to protect the system from excessive pressure in the event the engine driven pumps fail to compensate. One port of the valve is connected to system pressure and one to return. Should pressure reach 3560 psi, the valve will open and pump output will flow back to the reservoir. Once this valve is open, pressure must drop to approximately 3150 psi before it will reseat.

High Pressure Filters

High pressure filters are installed downstream of the engine driven pumps on the right side of the engine accessory section, to prevent contaminates passing from the pumps into the system.

Should the filter element become obstructed, a pressure drop across the filter will occur. If the pressure drop reaches approximately 70 psid, a red (clogged filter) indicator extends from the top of the filter body, indicating the filter must be removed and cleaned as soon as possible. There is no bypass relief valve provided in the high pressure filters.

Return Filters

The return line filter located forward of the system reservoir filters the fluid before it enters the reservoir. Should the filter element become contaminated, a pressure drop across the filter occurs. If the pressure drop reaches 70 psid, a red (clogged filter) indicator extends from the top of the filter body. Should the element become so dirty that the pressure drop reaches 100 psid an internal relief or bypass valve will open and allow return fluid to enter the reservoir unfiltered. Anytime the indicator is extended, the filter element must be removed, cleaned and reinstalled as soon as possible.

Case Drain Return Filter

The case drain return filter is located just forward of the reservoir. This filter is identical to the system return filters with the exception of the size and flow volume. The red (clogged filter) indicator extends when pressure drop across the filter reaches 28 psid and the bypass opens at 40 psid.

Hydraulic System Nr 3

Reservoir

The reservoir is on the Nr 3 service center forward of system Nr 2 reservoir on the left wall of the cargo compartment. The fluid capacity is 4.8 US gallons and it can be serviced in flight. A sight gage on the side of the reservoir is calibrated 0-PSI FULL, 0-PSI REFILL, 3000-PSI FULL, 3000-PSI REFILL. Service instructions are placarded on the reservoir.

The reservoir is non-pressurized and vented through a filter to the cargo compartment. Baffling on the inside prevents direct flow of fluid from the system return to the outlet port.

Electric Motor Driven Pumps

Two electrically driven, high-pressure, variable volume pumps, including the impeller type suction boost pumps in the same housing, connected in parallel, are located in the left wheel well. A constant flow of fluid through the case drain return provides lubrication and cooling. Normal pressure is 3000 ± 150 psi at 6000 rpm and maximum pressure 3400 psi for each pump.

Controls

A control switch for each pump is located on the hydraulic systems control and indicator panel, and has ON - OFF - RAMP CONTROL positions. When the Nr 1 switch is placed ON the pump will start instantly. (There is a two second time delay incorporated in the Nr 2 pump circuit.)

The hydraulic control panel is decaled "Wait five seconds before starting second pump" to prevent overloading the electrical system. The RAMP CONTROL position of each switch transfers control of related pump to the ramp control panel located in the aft end of the cargo compartment.

In addition to the normal controls, system Nr 3 pumps turn on automatically when any of the following is accomplished:

1. When spoiler control handle is moved out of the CLOSED position.
2. Anytime the EREO switch is in EMER OFF position and the spoilers move from closed position.
3. When both left or both right, or all four of the aileron power control switches are placed in the TAB OPERABLE position.
4. Either elevator control switch is placed to EMER position.
5. Pilot's stall prevention system operates.

When the normal pump control switches are in the OFF position and the pumps are energized by any one or all of the automatic methods, the pumps will stop when the last of the automatic system is returned to the normal position. The two second time delay of Nr 2 pump is effective when pumps are actuated automatically.

Two hydraulic fuses are located on the Nr 3 service center, downstream of each electric motor driven pump. The fuses are spring loaded open and vented to return, which allows the motors to come up on speed. The fuses are set to close off by fluid volume. When they close, pressure will build up.

Isolation Check Valves

An isolation check valve located on the service center, downstream of each pump prevents reverse flow, thus isolating pressure from an inoperative pump.

Pump Low Pressure Warning Switch

The low pressure warning switch is located aft of the Nr 3 reservoir on the left wall of the cargo compartment. The switch is set at 1350 ± 150 psi and operates a PRESSURE ON light (green) on the brake pressure and anti-skid control and indicator panel which is located on the pilots' center instrument panel. The light will stay ON above 1350 ± 150 psi.

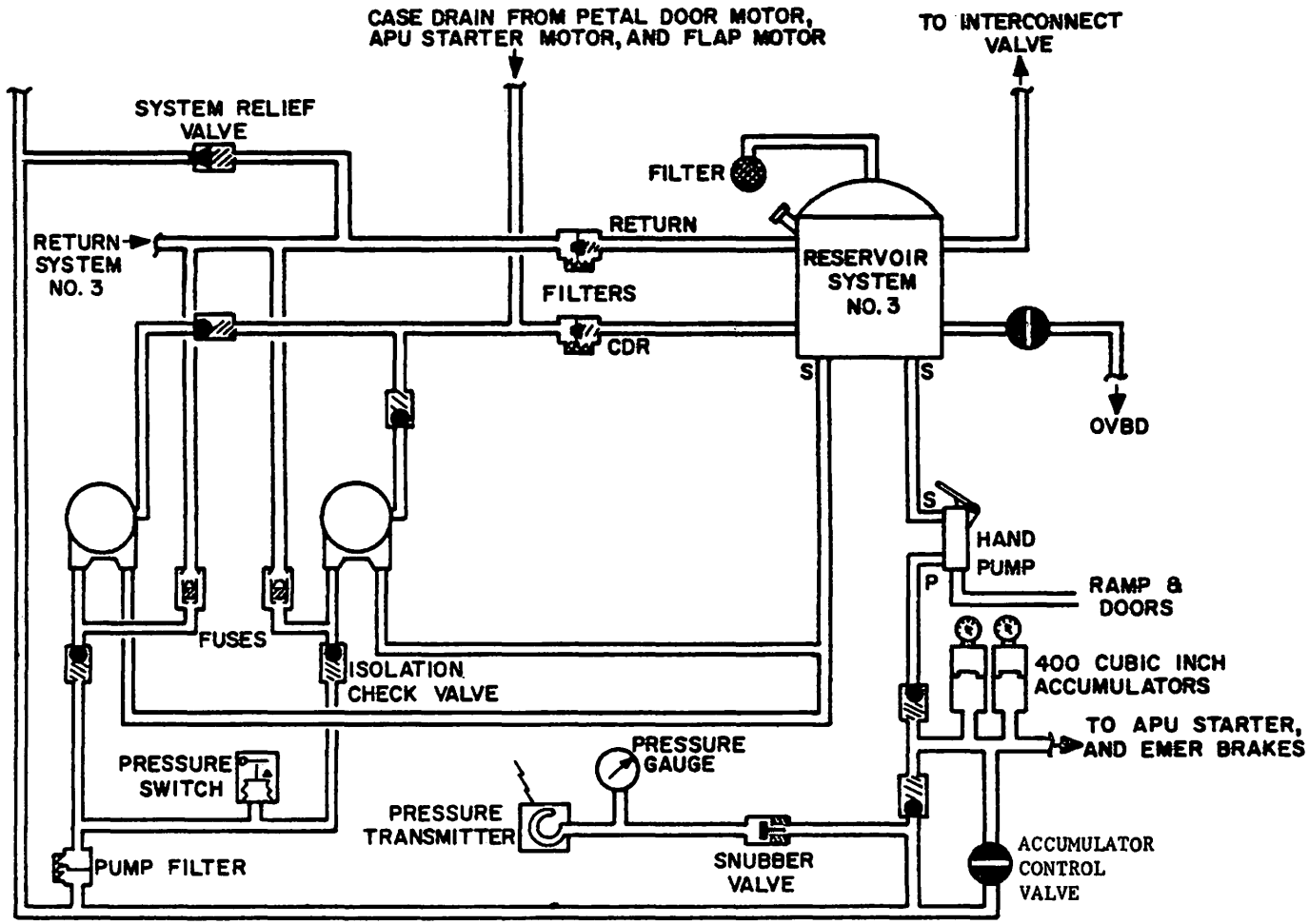

NO. 3 POWER SECTION HYDRAULIC SCHEMATIC

High Pressure Filter

A high pressure filter located aft of Nr 3 reservoir prevents contaminates passing from the pumps into the system. Should the filter element become obstructed, a pressure drop across the filter will occur. If the pressure drop reaches approximately 70 psid, a red (clogged filter) indicator extends from the top of the filter body, indicating the filter must be removed and cleaned as soon as possible. There is no bypass relief valve provided in the high pressure filter.

Return Filter

The return line filter located forward of the system reservoir filters return fluid before it enters the reservoir. Should the filter element become contaminated, a pressure drop across the filter will occur. If the pressure drop reaches 28 psid, a red (clogged filter) indicator extends from the top of the filter body. Should the element become so dirty that the pressure drop reaches 40 psid, an internal relief or bypass valve will open and allow return fluid to enter the reservoir unfiltered. Any time the indicator is extended, the filter element must be removed, cleaned and reinstalled as soon as possible.

Case Drain Return Filter

The case drain return filter is located just forward of the reservoir. This filter is identical to the system return filters with the exception of the size and flow volume. The red (clogged filter) indicator extends when pressure drop across the filter reaches 28 psid and the bypass opens at 40 psid.

Pressure Transmitter

The pressure transmitter is a bourdon-tube type located on the service center. It operates a 26 volt AC pressure gage on the hydraulic systems control and indicator panel. The pressure gage is calibrated in increments of 250 psi from 0 to 4000 psi. There is a direct reading pressure gage located on the service center in the cargo compartment.

Main Accumulators

Two 400 cubic inch, piston type, accumulators are installed on the Nr 3 service center, and are normally charged to approximately 3000 psi by Nr 3 system. A direct reading pressure gage is installed on each accumulator.

These accumulators aid Nr 3 pumps during peak loads. They can be used to start the APU. In addition, the accumulators can be used to furnish emergency brake pressure, when normal brake pressure is not available. Accumulator pressure is used for the emergency brake system, when electrical power is off (approximately 10 applications).

Accumulator Control Valve

The accumulator control valve (bypass valve) is electrically energized open when pumps are turned on and deenergized closed when pumps are shut off.

Hand Pump

A double action type hand pump, located on the left wall of the cargo compartment immediately below the system Nr 3 reservoir, provides a means of pressurizing the accumulators, emergency brakes, ramp and doors when the high pressure pumps are inoperable. Approximately 460 strokes of the hand pump are required to pressurize the accumulators to 3000 psi. A check valve is installed between the pump outlet port and the system pressure

line to prevent pressure buildup against the pump, during normal operation. A direct reading pressure gage is located near the Nr 3 reservoir to indicate hand pump pressure.

System Relief Valve

The relief valve is located on the service center to protect the system from excessive pressure in the event the electric motor driven pumps fail to regulate. One port of the valve is connected to the system pressure and one to return. Should pressure reach 3560 psi, the valve will open and pump output will flow back to the reservoir. Once this valve is open, pressure must drop to approximately 3150 psi before it will reseat.

Hydraulic System Nr 3 Pressure Usage

Hydraulic System Nr 3 supplies pressure to:

1. Wing Flaps
2. Wing Spoilers
3. Aileron Tab Lockout
4. Elevator Emergency Power
5. Pilot's Stall Prevention
6. Ramp and Doors
7. Emergency Brakes
8. APU Starter

Ground Interconnect Valves

Two interconnect valves are located between system Nr 2 and Nr 3 reservoirs. Both valves are controlled by one manually operated control handle. Moving the control handle to the INTERCONNECT position, will position one valve to connect the Nr 3 system pressure to the Nr 2 system manifold, and the remaining valve will connect the Nr 2 and Nr 3 system reservoirs through an interconnect tube. With the control handle in the INTERCONNECT position, the Nr 3 system electrical motor-driven pumps can be used to provide power for all subsystems normally operating on Nr 2 system power.

The fluid level in the Nr 2 and Nr 3 system reservoir will remain constant because of the reservoir interconnect tubing. An isolation check valve prevents the flow of fluid through the pressure line from system Nr 2 to system Nr 3. This system is for GROUND CHECK ONLY and the control handle must be in the CLOSED position before flight.

APU Starter

The APU starter is driven by a hydraulic motor powered by pressure from the accumulators. Controls for the APU are located on the upper left corner of the flight engineer's panel. An APU ACCUM SEL switch allows the selection of No. 1, No. 2, or BOTH accumulators as desired.

Each accumulator will last approximately 10 seconds when used to start the APU.

An additional accumulator is installed in the APU starter inlet line. This accumulator acts as a shock absorber, absorbing the initial starting pressure, and prevents excessive gear box torque from being transmitted to the clutch.

The Accumulator Control Valve and the two starter selector valves are located on the Nr 3 service center. Each valve incorporates a manual override.

The APU, located on the left forward gear pod, supplies air for engine starting, air for environmental systems, and mechanically drives an AC generator during ground operation only.

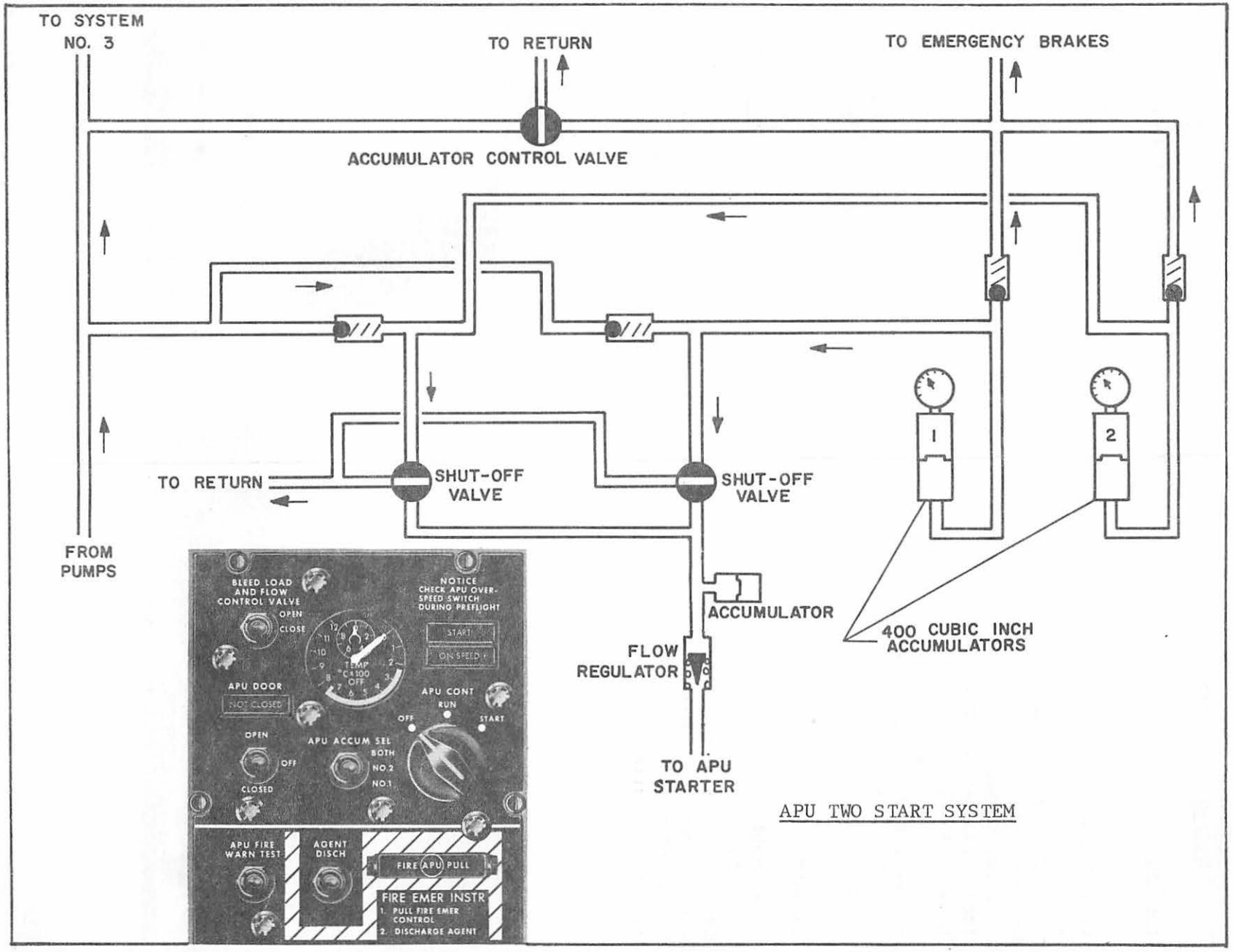

APU TWO START SYSTEM

Hydraulic System Nr 4

Reservoir

The hydraulic fluid reservoir is located under the flight deck in the right hand (electronic) underdeck rack area. The fluid capacity is approximately 1 gallon and can be serviced in flight through the filler neck. A placard is provided for servicing. There is a sight gage mounted on the reservoir and the reservoir is vented to a vent box in the underdeck area. Hydraulic fluid flows by gravity to the hand pump and check valve.

Hand Pump

A double action type hand pump is located in the right underdeck electronic equipment compartment. When the handle is not in use, it is secured to the structure near the pump. A direct reading pressure gage is on the front bulkhead, in the right electronic underdeck rack to indicate hand pump pressure.

The hand pump is operated to build up system pressure which is limited to approximately 1200 psi by a relief valve connected to the pressure line and to the reservoir.

Manual Selector Valve

A manually operated selector valve is located on the front bulkhead, in the right electronic underdeck rack below the pressure gage. A two position valve, it has NORMAL and EMERGENCY positions.

Hydraulic System Nr 4 Pressure Usage

Hydraulic System Nr 4 is used to extend and lock the nose landing gear in the down position, if the Nr 2 hydraulic system is inoperative.

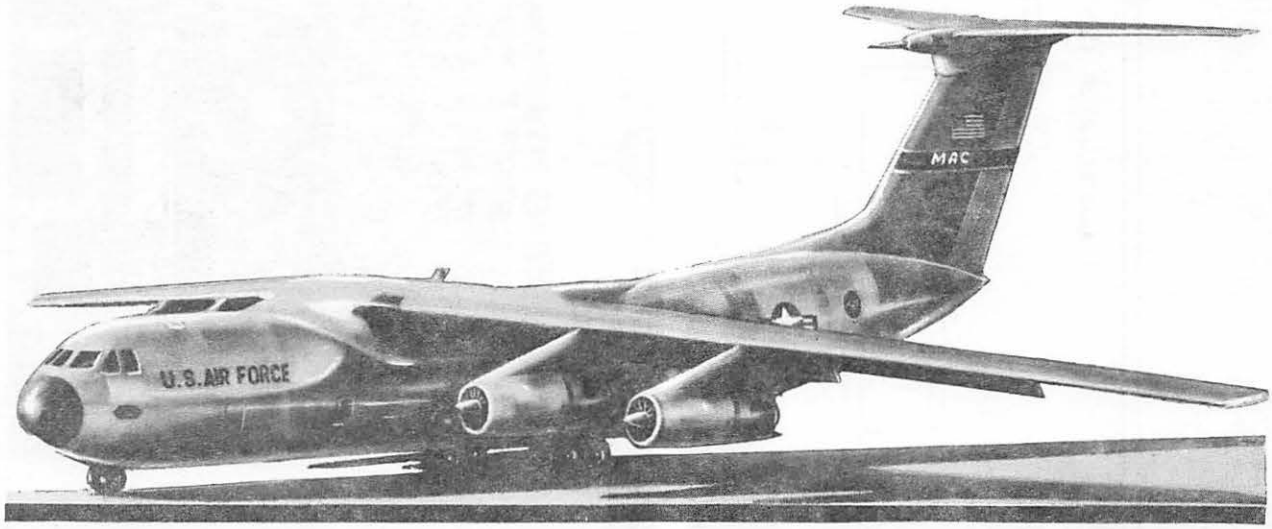

Chapter 2

LANDING GEAR SYSTEM

The landing gear is a fully retractable tricycle type, consisting of a steerable dual wheel nose gear and two "four-wheel bogie" main gears. All gears retract forward and up. The doors are actuated by gear movement through mechanical linkage. A door locking mechanism prevents inadvertent opening of the main landing gear doors in flight. The landing gear system is electrically controlled and hydraulically actuated.

Normally the landing gear should retract in approximately 10 seconds and extend in approximately 15 seconds. The maximum airspeed for landing gear operation is 200 KCAS or 0.48 Mach. Maximum airspeed with landing gear extended is 235 KCAS or 0.55 Mach.

Main Landing Gear

Each main landing gear assembly consists of an oleo-pneumatic shock strut, an axle beam and axle assembly, torque arms, wheels and tires, drag braces, drag links and down lock, up lock, leveler rod, axle (bogie) beam positioner system, actuating cylinder, wheel brake assembly, and brake torque links.

Main Landing Doors

The main landing gear (MLG) doors are actuated by mechanical linkage and gear movement. Three doors are installed on each main landing gear pod; one upper door on top of each pod above the MLG strut and two lower doors. All three doors open simultaneously and the strut extends thru the upper door opening while the landing gear is extended. All doors remain closed when the landing gear is up and locked.

Main Landing Gear Door Uplock

When the aircraft is on the ground, the landing gear doors are open and the door lock hydraulic actuator is pressurized to the unlocked position. The door lock hydraulic actuator is sequenced to the locked condition when the landing gear goes into the uplock position. The door lock system is designed to hold the MLG doors closed and prevent gapping while the MLG is up and locked in flight. In case of Nr 2 hydraulic system failure, each door uplock latch assembly may be manually unlatched by using the red T-handle (Step Nr 1) to allow the door to open.

Main Landing Gear Shock Struts

The stroke of the shock strut meets special requirements of C-141A aircraft. To reduce fuselage bending loads (stresses), the main landing gear has been placed as close to the center of gravity as possible. The overhang of the fuselage aft of the main landing gear, together with small ground clearance, limits the tail-down angle during landing or takeoff. To compensate for this, a two step action of the shock strut is provided. By setting the piston stroke at approximately 28 inches, the wheels are placed sufficiently below the fuselage to permit an approximate 11-degree tail-down angle at impact. During about the first 17 inches of shock strut compression, the energy is absorbed at a normal rate by the action of the hydraulic fluid. The shock strut then compresses at a reduced rate, controlled by two fixed orifices in the strut, until the tail clearance is ample.

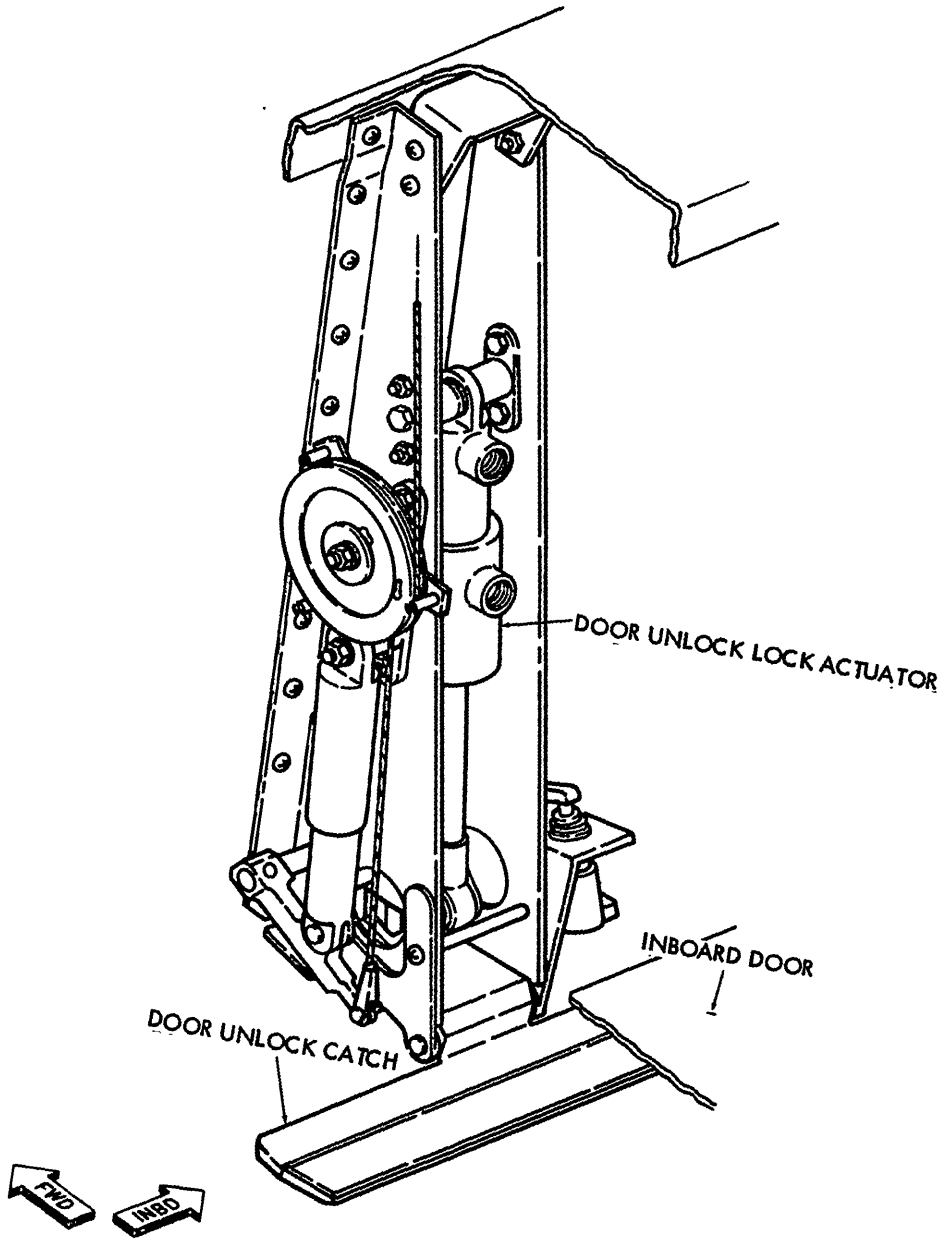

MAIN LANDING GEAR DOOR UPLOCK

1. UP-AND-LOCKED SWITCH
2. UPLOCK ASSEMBLY
3. TORQUE TUBE
4. UPLOCK ACTUATING ARM
5. TORQUE TUBE DRIVE PUSHROD
6. BELLCRANK ASSEMBLY
7. DOOR MECHANISM LINK
8. LEVELER ROD ASSEMBLY
9. TOUCHDOWN SWITCHES
10. SHOCK STRUT
11. OUTER CHAMBER FILLER VALVE
12. INNER CHAMBER FILLER VALVE
13. DRAG LINK ASSEMBLY
14. DOWN-AND-LOCKED SWITCH
15. DOWNLOCK ACTUATING CYLINDER

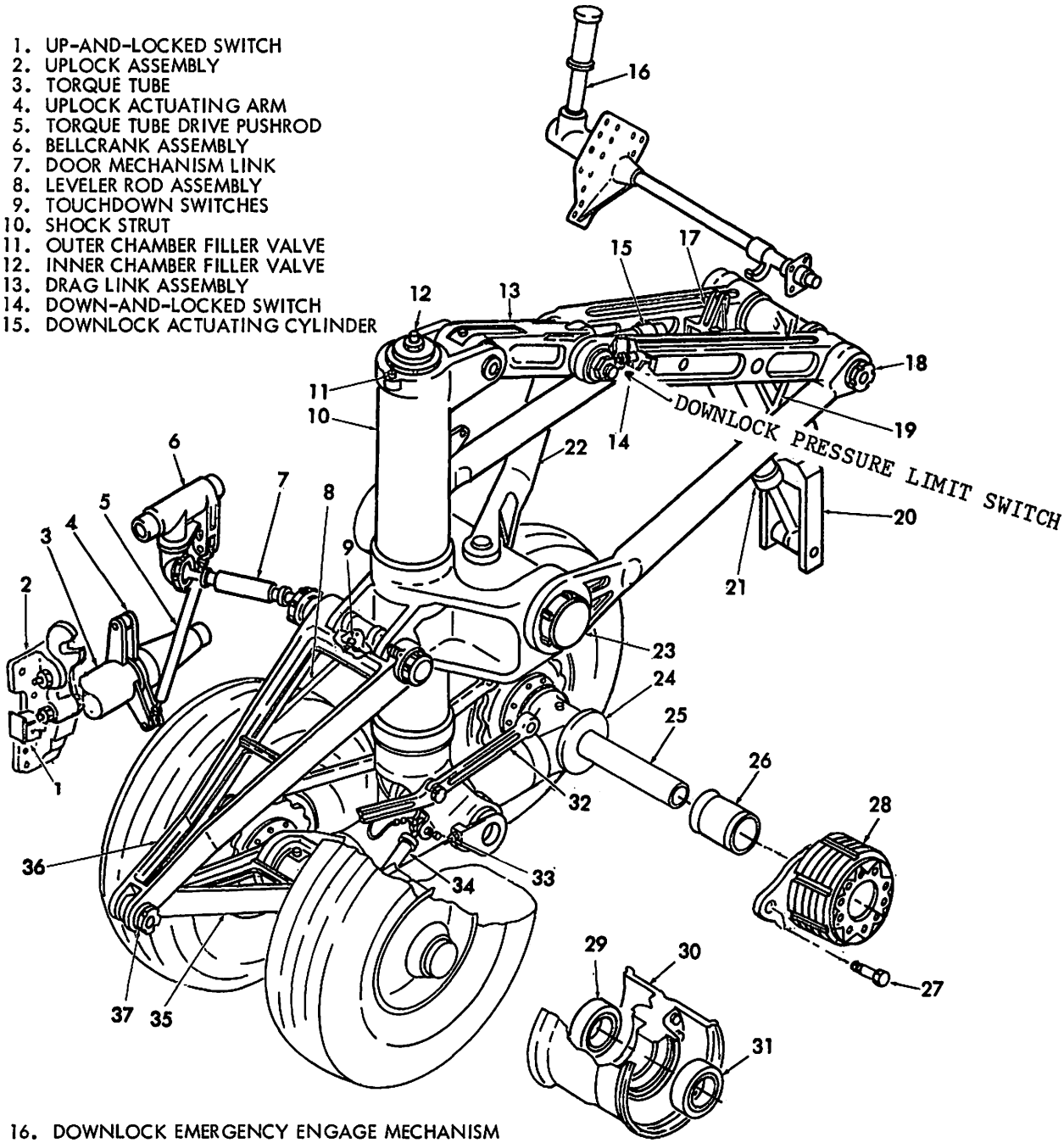

16. DOWNLOCK EMERGENCY ENGAGE MECHANISM
17. DOWNLOCK EMERGENCY ENGAGE FITTING
18. SHAFT
19. ATTACH LINK
20. LOWER FRAME
21. MAIN GEAR ACTUATING CYLINDER
22. DRAG BRACE
23. TRUNNION SHAFT
24. AXLE BEAM ASSEMBLY
25. AXLE
26. SPACER
27. BRAKE TORQUE LINKS ATTACH BOLT
28. BRAKE ASSEMBLY
29. INNER WHEEL BEARING
30. WHEEL ASSEMBLY
31. OUTER WHEEL BEARING
32. BRAKE TORQUE LINK
33. BOGIE POSITION SWITCH
34. AXLE BEAM POSITIONER ASSEMBLY
35. LOWER TORQUE ARM
36. UPPER TORQUE ARM
37. SOCKET ASSEMBLY

Main Landing Gear

Leveler Rod Assembly

The leveler rod is a mechanical linkage which positions and holds the MLG axle (bogie) beam parallel to the retracted position. This provides clearance of the main landing gear doors during the last portion of retraction and the first portion of extension.

Axle (Bogie) Beam Positioner

The pneumatic-hydraulic axle beam positioning cylinder maintains the axle beam approximately perpendicular in the longitudinal axis of the shock strut assembly, both when the gear is extended and during part of the extension and retraction cycle.

Main Landing Gear Downlock

The main landing gear downlock assembly is a combination of hydraulic action and mechanical linkage. When the landing gear is extended, the downlock latch assembly rides on the forward drag link and, as the drag link becomes straight, the latch rides over the mechanical stop and locks into place. Any aft movement of the latch is resisted by spring action inside the downlock cylinder. This spring action is overcome hydraulically when the gear is to be retracted, which forces the latch away from the stop. In case of Nr 2 hydraulic system failure, and the main landing gear doesn't lock in the down position, operating a red emergency downlock engage handle (Step Nr 3) mechanically moves the associated gear to the downlock position.

Main Landing Gear (Ground) Safety Pin

The MLG ground safety pins are inserted through the drag brace aft of the downlock latch. The ground safety pins must be inserted from the inboard to outboard side of the strut. In the event an unsafe condition is indicated after a landing gear extension, the ground safety pins can be installed in flight through the gear inspection windows.

Main Landing Gear Uplock

The MLG is locked in the up position by an uplock assembly mounted on the fuselage in each wheel well. The uplock hook receives a roller on the torque tube bellcrank forward of the door actuating mechanism. The roller forces the hook down into the locked position. The hook is held in the locked position by three links, a bellcrank, and a stop. The links are forced into an over-center position by the hook, and are prevented from going past the over-center position by a stop on one link which rests against the uplock bellcrank. Actuation of the hydraulic uplock actuating cylinder will cause rotation of the bellcrank and pull the links out of the over-center position. A spring attached to the hook then forces the hook out of the locked position.

In case hydraulic system Nr 2 fails the MLG uplock may be released manually by pulling a red T-handle (Step Nr 2) in the cargo compartment at station 1038 to 1058.

Nose Landing Gear

The nose landing gear assembly retracts forward into the nose section. The assembly consists of an air-oil shock strut, an axle, torque arms, a drag link and up-down lock assembly, an actuating cylinder, and wheels and tires. The shock strut cylinder has a trunnion by which the nose gear is mounted to structural pillow blocks on each side of the wheel well. The nose gear is locked in either the up or down position by an up-down lock incorporated in the drag link.

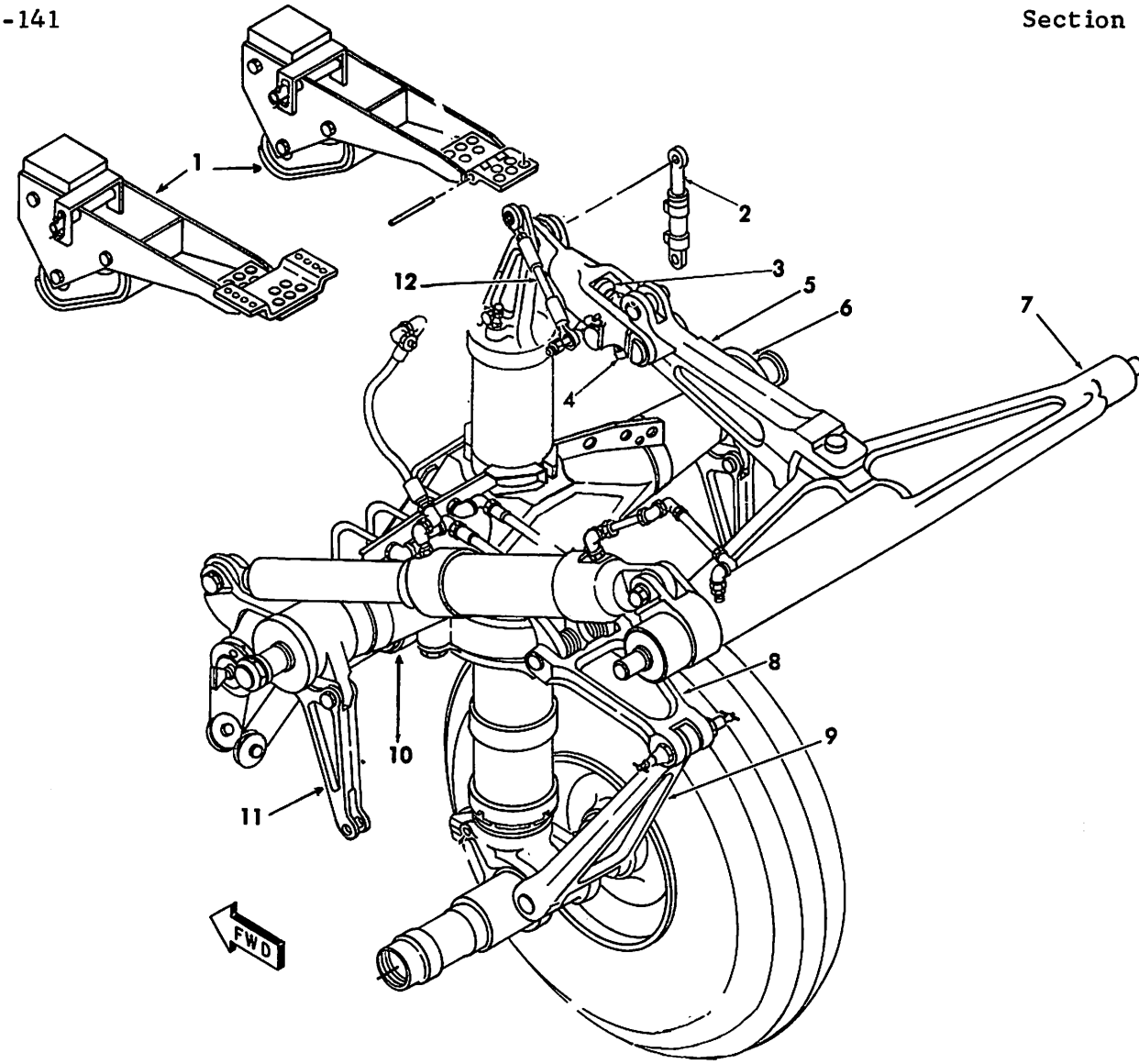

1. SPIN BRAKE
2. UP-DOWNLOCK ACTUATING CYLINDER
3. UP-DOWNLOCK SPRING ASSEMBLY
4. UP-DOWN-LOCKED SWITCH
5. DRAG LINK
6. STRUT TRUNNION
7. DRAG LINK TRUNNION
8. UPPER TORQUE ARM
9. LOWER TORQUE ARM
10. STEERING CYLINDER
11. DOOR ACTUATING BELLCRANK
12. UP-DOWNLOCK ACTUATING PUSHROD

Nose Landing Gear Doors

The nose landing gear doors enclose the nose wheel well when the gear is in the retracted position. The doors open and close by the operation of the nose landing gear through a system of adjustable pushrods and bellcranks. The doors consist of two clam-shell doors covering the forward section and one single door on the aft section. When the gear is in the up position, all doors are closed and are preloaded. The clam-shell doors move downward and outboard as the gear extends, and then back to the closed position when the gear is down. The aft door moves down and back under the fuselage, and remains in this position until the gear is retracted. Bumpers on the aft door contact the fuselage to provide additional support for the door.

Nose Landing Gear Up-Down Lock

The nose landing gear up-down lock mechanism is incorporated in the drag link assembly, and the actuating cylinder is mounted on the nose gear shock strut. The cylinder is connected to the mechanism through bellcranks and a pushrod. The gear is locked in either the up or down position by two cranks forced into an over-center position. The cranks are forced into the over-center position by a combination of a spring and hydraulic pressure to the actuating cylinder, and are maintained in the locked position by the spring assembly. Hydraulic pressure to the unlock side of the actuating cylinder unlocks the up-down lock mechanism.

Nose Landing Gear (Ground) Safety Pin

The ground safety pin is inserted in the nose landing gear (NLG) drag brace as a safety precaution when the aircraft is on the ground.

An additional pin, which is longer, is stowed near the NLG inspection window (right underdeck area). This pin is used in flight, after emergency extension of the NLG.

Friction Spin Brake

The nose landing gear spin brake stops the nose wheels from spinning when the gear is in the retracted position.

Landing Gear Selector Valves

The three position four-way selector valves are 28 volt DC solenoid controlled and hydraulically positioned. Manual override buttons provide manual control in the event 28 volt DC power is lost. The door lock, gear downlock, and the MLG selector valves are all located on the Nr 2 hydraulic service center. The NLG selector valve is located in the left underdeck area under the autopilot "J" box.

Landing Gear Control Panel

The landing gear control panel is located on the right side of the pilots center instrument panel. The two position (UP-DOWN) landing gear control handle is electrically connected to all of the gear solenoid operated selector valves.

A 28 volt DC, solenoid operated locking mechanism prevents movement of the landing gear lever from the DOWN position until the main landing gear struts are fully extended after takeoff. The circuits controlled by the landing gear lever receive 28 volt DC power from the Isolated DC Bus through a LANDING GEAR CONT circuit breaker on the flight engineer's Nr 3 circuit breaker panel. A manual release, adjacent to the landing gear lever, can be used to release the locking mechanism in case of electrical malfunction.

Landing Gear Warning Lights

Two red warning lights in the landing gear control handle will illuminate when the landing gear control handle is placed to DOWN and will remain illuminated until all landing gears are down and locked. The light will also illuminate when the landing gear control handle is placed to UP and will remain illuminated until all landing gears are up and locked. The warning light will illuminate if a throttle is retarded to approximately one inch forward of IDLE START position and all landing gears are not down and locked. The light will also illuminate if one or both MLG door uplocks are not locked or if there is a bad MLG door uplock microswitch.

Landing Gear Warning Horn

A warning horn, located in the flight station, will also sound if a throttle is retarded to approximately one inch forward of IDLE START position and all landing gears are not down and locked. Pressing the HORN SILENCER button on the landing gear control panel will cause the horn to silence but the light in the handle will remain illuminated until the throttle is advanced or all gears are down and locked.

The warning horn will sound if the flap control handle is placed to the LANDING position and all gears are not down and locked. The horn silencer button will not silence the horn if it sounds under these conditions.

Landing Gear Position Indicators

Three 28 volt DC flag-type position indicators, located above the landing gear lever, show the position of each landing gear. A miniature wheel and tire flag indicates gear down and locked, an UP flag indicates gear up and locked, and a black and yellow striped flag indicates the gear is neither up and locked nor down and locked. Limit switches, actuated by movement of the landing gear to the down-and-locked and up-and-locked positions, control the position indicators. Power for operation of the indicator is supplied from the Isolated DC Bus through a LANDING GEAR POS IND circuit breaker on the Nr 3 circuit breaker panel.

Warning Light and Horn Test Switch

Located on gear control panel, it is used to test the landing gear warning light and horn system.

Axle (Bogie) Beam Position Indicator

A 28 volt DC flag-type bogie position indicator for each of the main gear bogies is located on the pilots' center instrument panel. A miniature wheel and tire flag indicates the associated bogie is in the position required for landing. (Within 5° perpendicular to the main gear shock strut.) A black and yellow striped flag indicates the bogie is either in transit or is up. Limit switches, actuated by movement of the bogies, control the position indicators. Power for operation of the indicators is supplied from the Isolated DC Bus through a BOGEY POS IND circuit breaker on the flight engineer's Nr 3 circuit breaker panel.

Normal Operations

Retraction

Movement of the landing gear control handle to the UP detent rotates a cam to actuate a limit switch. The limit switch closes to complete the circuit from the Isolated DC Bus to the up solenoid of the landing gear selector valves. The up solenoid is energized and opens the selector valves to

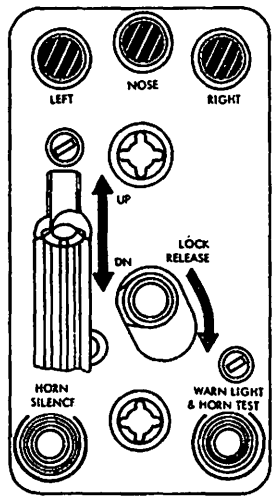

POSITION INDICATOR INDICATIONS

GEAR UP AND LOCKED

GEAR IN AN INTERMEDIATE POSITION

GEAR DOWN AND LOCKED

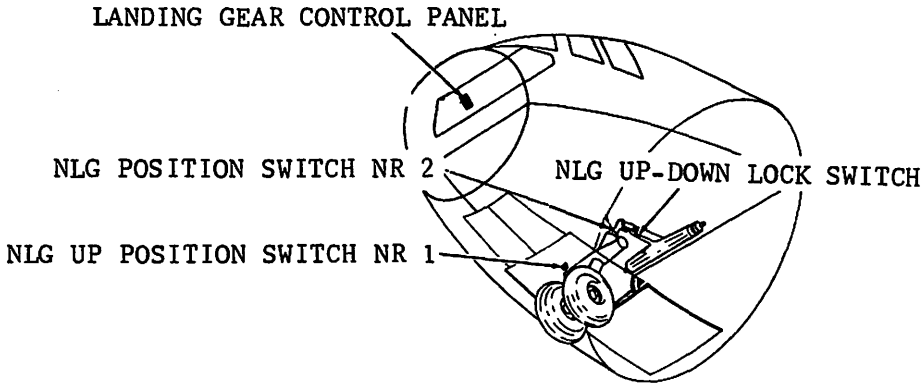

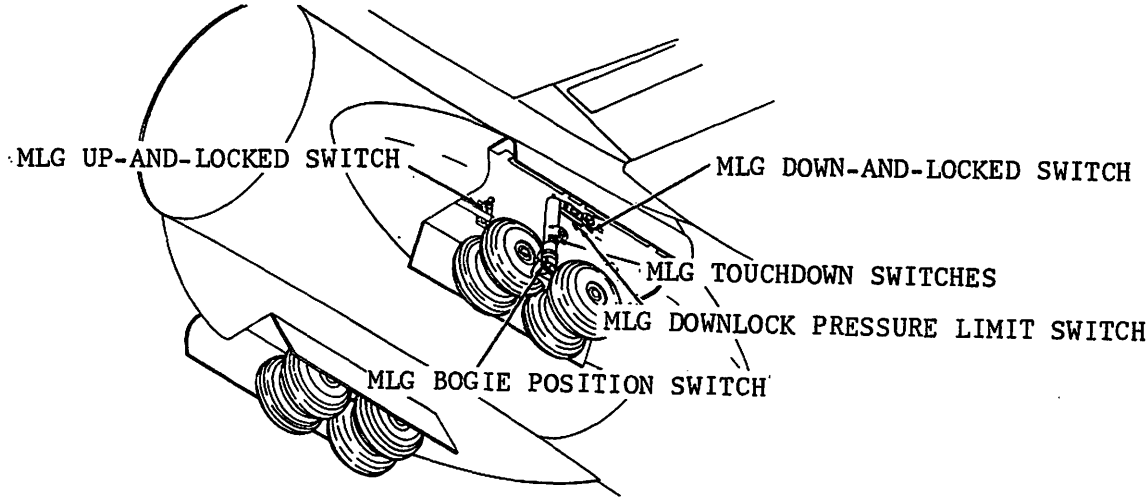

Landing Gear Electrical Components

permit hydraulic system Nr 2 pressure to be applied simultaneously to the downlock and gear actuating cylinders of the left main and right main landing gears. Hydraulic system Nr 2 pressure is also applied simultaneously to the up-down lock and gear-actuating cylinder of the nose landing gear. The downlock cylinder of each main landing gear retracts to pull the locking latch from a recess in the forward drag link, which turns with landing gear movement. This permits the actuating cylinder of each MLG to retract and raise the gear. As each main landing gear reaches the full up position, a roller on each landing gear door mechanism torque tube arm strikes the uplock hook. The up-down lock cylinder of the nose landing gear retracts to unlock the over-center locking mechanism and thus permit the actuating cylinder to retract and raise the nose landing gear. The NLG is locked in the raised position by the over-center locking mechanism linkage.

Switches, which are actuated closed by movement of the landing gear to the up-and-locked position, complete circuits to the landing gear position indicators on the landing gear control panel to provide gear-up indications. With the gears up and locked, the hydraulic pressure is off. As the gears move to the up and locked position, the switches are closed, completing the circuit through a relay main landing gear door lock selector valve, opening the valve to port hydraulic system Nr 2 pressure to the MLG door lock actuating cylinders to engage the door uplock latches. As the door locks are locked, the landing gear warning lights are extinguished and the door lock selector valve is de-energized.

Hydraulic system return pressure is automatically applied to the brakes during gear retraction to stop the rotation of the main wheels. Nose gear wheel spin is stopped during final retraction by contact with friction pads installed in the wheel well.

Extension

Movement of the landing gear control handle to the DOWN detent actuates limit switches. One limit switch, which closes to complete the circuit from the Isolated DC Bus to the down solenoid, becomes energized and opens the MLG selector valve to permit hydraulic system Nr 2 pressure to be applied simultaneously to the uplock, gear actuating cylinders of the left and right main landing gears, and to the door uplock actuators.

Hydraulic system Nr 2 pressure is also simultaneously applied through the NLG selector valve to the up-down lock and the gear actuating cylinder of the NLG. The uplock cylinders of the main landing gear extend to release the uplock hooks through mechanical linkage, and the up-down lock cylinder of the NLG extends to unlock the over-center linkage. The actuating cylinders of the left main, right main, and nose landing gears then extend to assist gravity in lowering the landing gear. When each main landing gear reaches the fully extended position, limit switches energize the downlock actuator solenoid valve at the end of the landing gear extension cycle, after the drag braces have reached the full down position. The downlock latch then slides into the recess to lock each main landing gear in the extended position. The nose gear is locked in the extended position by the over-center locking linkage.

Limit switches, which are actuated closed by movement of the landing gear to the down-and-locked position, complete circuits to the landing gear position indicators on the landing gear control panel to provide a landing gear down indication, and to the bogie posi-

tion indicator panel to indicate bogies in position.

Emergency Operation

The function of the landing gear emergency extension system is to provide the manual capability of releasing and downlocking the landing gear in the event of hydraulic failure. There are no provisions for manually retracting the landing gear in an emergency.

Inspection Windows

Windows are provided, along with the necessary inspection lights, for the visual inspection and access (with the aircraft depressurized) to the main and nose landing gear downlocks during flight. The main gear windows and light switches are located in the cargo compartment wall at station 1023. The nose gear window is located in the right hand underdeck area.

Extension With DC Power or Control Failure

If electrical power is lost to the landing gear control circuits, and if hydraulic pressure is still available from Nr 2 hydraulic system, the landing gear may be lowered by manually positioning the landing gear selector valves. If the landing gear is lowered by manually positioning these selector valves, normal brake operation (if anti-skid power is not lost) and nose wheel steering will be available.

1. Place the landing gear lever in the DOWN position.

2. Depress DOWN side of nose gear selector valve, located on left side of underdeck area.

3. Depress UNLOCK side of MLG door lock selector valve, located on Nr 2 hydraulic service center.

4. Depress DOWN side of MLG selector valve, located on Nr 2 hydraulic service center.

5. When main landing gear is down, depress LOCK side of MLG downlock selector valve.

6. Visually check that main gear downlocks and nose gear downlock are in place.

7. Check landing gear indicators on pilots' center instrument panel for a down-and-locked indication.

8. Depressurize aircraft and install landing gear safety pins.

WARNING

The nose gear and main gear selector valves are designed to stay in the DOWN position once selected. If, after depressing the down side of the selector valve for the nose gear or main gear, the gear does not go down and lock, the down side of the selector valve will have to be held in manually until the gear is down and locked. If either the nose gear or main gear selector valve has to be held in manually until the gear is down and locked, the pilot MUST be advised of this malfunction immediately. Failure of the nose gear selector valve to remain in the DOWN position will result in loss of normal brake control pressure and nose wheel steering. Failure of the main gear selector valve to stay in the DOWN position will result in the loss of normal brake pressure to the anti-skid control valves. If this happens, the emergency brakes have to be used to stop the aircraft.

Landing Gear Emergency Extension (Zero Hydraulic Pressure)

This paragraph states the general steps relating to emergency extension of both the nose landing gear and the main landing gears. Detailed instrutions are listed later.

1. Reduce airspeed to below 200 knots.

2. Place the Landing Gear Lever in DOWN position.

3. Depressurize the aircraft after descending to an altitude not requiring oxygen. (May be done at altitude if oxygen is used.)

4. Pilot and scanner maintain interphone contact while manually extending the gear.

5. Pilot monitors the landing gear position indicators. When a down-and-locked indication is noted, pilot advises the scanner by stating the name of the gear and "DOWN AND LOCKED."

Nose Landing Gear Emergency Extension (Zero Hydraulic Pressure)

Hydraulic system Nr 4 is used to extend and lock the nose landing gear in the down position if hydraulic system Nr 2 is inoperative. All system components are located under the flight deck in the right hand underdeck area compartment.

Control Panel

Hydraulic system Nr 4 control panel is located in the right side of the electronic equipment compartment at fuselage station 414. A pressure gage, mounted on the panel, indicates pressure in the system. The EMERG NLG SELECTOR VALVE handle, mounted on the panel, is lockwired to the NORMAL position except during emergency operation of the nose landing gear.

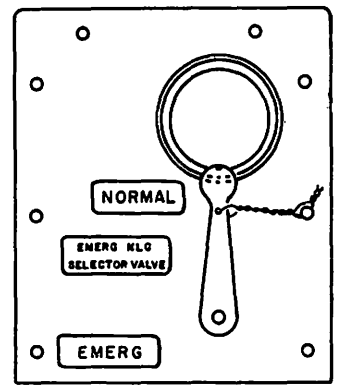

NOSE LANDING GEAR EMERGENCY CONTROL PANEL

Nose Gear Lowering Details

1. Place the Emerg NLG Selector Valve Handle in the EMERG position.

CAUTION

Do not return the Emerg NLG Selector Valve Handle to the NORMAL position until after the aircraft has been parked and secured.

NOTE: The NLG handpump may have to be operated from a 3 to 5 minute period before the nose gear indicates down and locked.

2. Operate the Emerg NLG handpump until the copilot states "NOSE GEAR DOWN AND LOCKED."

3. Remove the nose gear inspection window and install the nose gear safety pin in the downlock. Advise the copilot "NOSE GEAR SAFETY PIN INSTALLED."

Main Landing Gear Emergency Extension (Zero Hydraulic Pressure)

The handles used for this purpose and instructions are identified as Steps Nr 1, 2, and 3, MLG Door Lock Emergency Release, MLG Uplock Emergency Release, and MLG Emergency Downlock Engage Handle. Step Nr 4 is for installation of the ground safety pin which completes the emergency extension cycle.

1. Pull the MLG Door Lock Emerg Release Handle (Step 1) for both the left and right main landing gears.

2. Pull either of the MLG Uplock Emerg Release Handles (Step 2).

3. Rotate MLG Downlock Emerg Handle (Step 3) downward to engage the downlock. After the gear is DOWN and LOCKED, return the handle to the normally STOWED position.

4. Proceed to the other main gear. Pull the MLG Uplock Emerg Release Handle (Step 2).

5. Rotate the MLG Downlock Emerg Handle (Step 3) downward to engage the downlock. After the gear is DOWN and LOCKED, return the handle to the normally STOWED position.

6. Open both main gear inspection windows and install the safety pin in each downlock (Step 4). Advise the copilot "BOTH MAIN GEAR SAFETY PINS INSTALLED."

WARNING

Normal brakes and nose wheel steering may not be available if the landing gear is extended manually because of loss of hydraulic pressure to the landing gear. Emergency brakes should be used.

CAUTION

It is possible to have normal brake pressure indicated on the brake pressure gage and still not have brake pressure due to a main landing gear selector valve malposition.

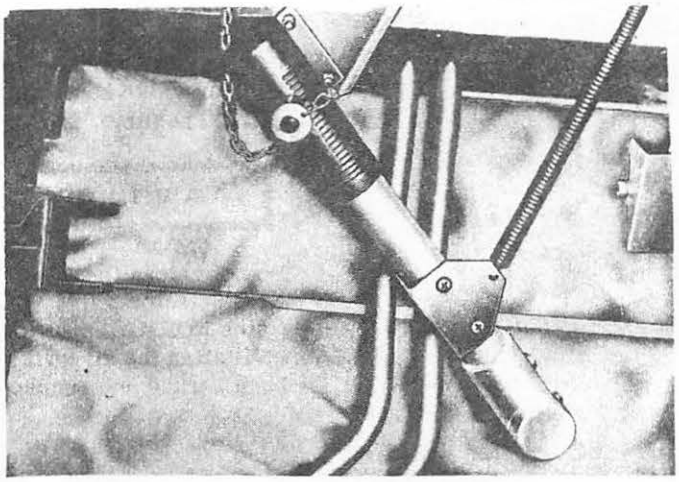

MAIN LANDING GEAR DOWNLOCK HANDLE

Chapter 3

NOSE GEAR STEERING SYSTEM

Introduction

Hydraulic pressure for the nose gear steering system is supplied by Hydraulic System Nr 2 from the nose gear downline. A steering wheel, located on the pilot's side console, provides the control for steering the nose wheels. The nose gear wheels can be steered 80 degrees left or right of center with the steering wheel.

Nose gear steering by movement of the rudder pedals is also incorporated. A maximum of eight degrees steering left or right of center is available. The steering wheel tracks this movement.

Turning the steering wheel mechanically positions a control valve which ports pressurized fluid to the left or right nose gear steering cylinders to actuate the rack and pinion type steering mechanism. A cable-type mechanical feedback mechanism automatically repositions the control valve to neutral when the selected degree of turn is achieved.

A centering mechanism automatically holds the control valve in neutral when the nose wheels are not being turned, allowing free castering of the nose wheels and providing hydraulic shimmy dampening.

Centering cams within the strut automatically position the nose wheels in the line-of-flight when the nose landing gear strut is fully extended after takeoff.

Control Wheel Steering

The nose gear steering system is controlled by a nose gear steering wheel, located on the pilot's side console. A nose wheel position scale, with the placarded directions of "Left" and "Right" arranged to either side of a white center-position index mark, is installed immediately beneath the wheel. Two and three-fifths revolutions of the steering wheel are required to turn the nose wheel from center through a full 80 degrees left or right of the nose wheel centered position. The steering wheel is disengaged and locked when the gear is not in the down and locked position.

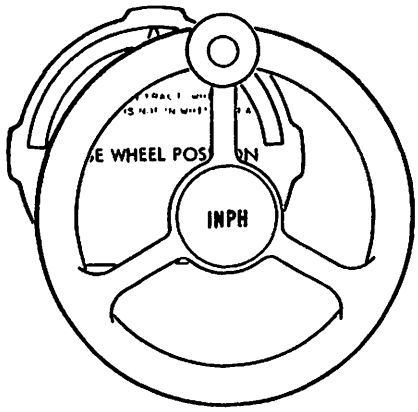

NOSE GEAR STEERING WHEEL

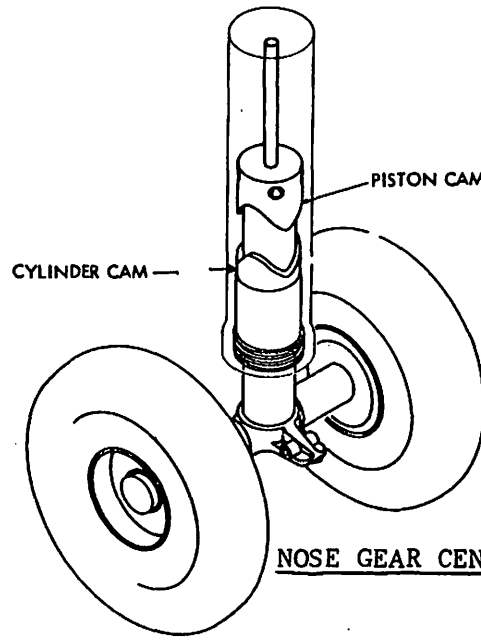

NOSE GEAR CENTERING CAMS

Rudder Pedal Steering

The rudder pedal steering system provides the pilot with the capability of maintaining steering control of the aircraft during takeoff and landing while retaining aileron control. Rudder pedal steering is available when main gear touchdown switches are activated or four forward main wheel spinup occurs. The rudder pedal steering system design is such that the steering wheel rotates with pedal movement and the rudder pedals move somewhat with steering wheel rotation unless restrained. The system also provides the capability of full rudder in one direction and full wheel rotation in the other direction.

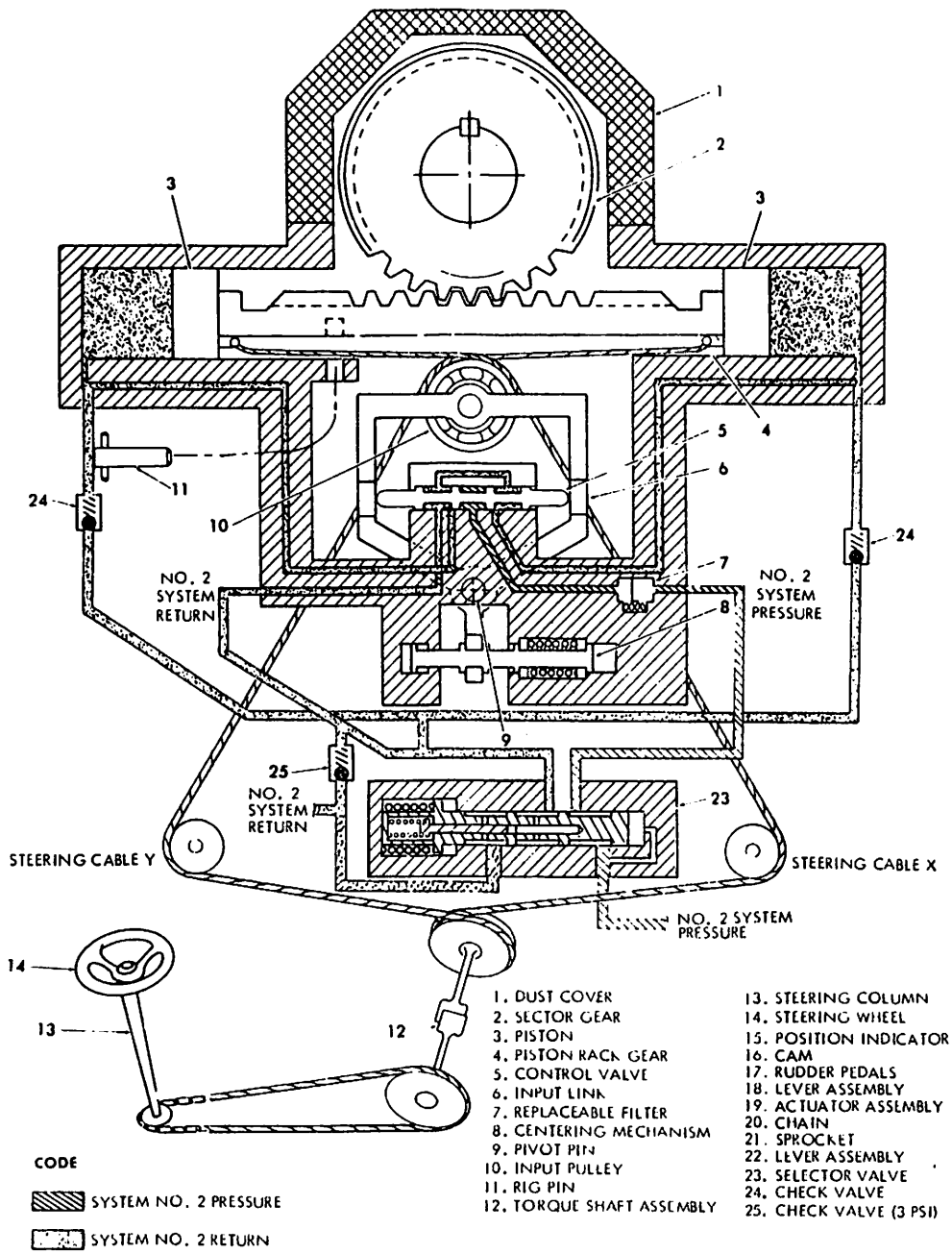

NOSE GEAR STEERING SCHEMATIC

Chapter 4

WHEELS AND BRAKES

Each main landing gear has four tubeless tires mounted on two-piece forged aluminum alloy wheels. Wheel halves are individually balanced and can be reassembled in any position. Three thermal relief plugs are located in each inner wheel half to prevent tire explosion due to excessive brake heat (390°F). The plugs have a fusible metal core that will melt and allow the tire to deflate before the wheel temperature gets high enough to cause a tire blowout.

The braking system provides normal, emergency, and parking brakes with an anti-skid system in the normal brakes system. A mechanical locking system maintains the application of hydraulic brake pressure when parking brakes are used. Pressurized hydraulic fluid to operate the brakes may be supplied from the normal (Nr 2) or emergency (Nr 3) hydraulic system. Manual selection of either system is provided by a brake selector switch on the brake and anti-skid panel on the center instrument panel.

Brake Assembly

A multiple-disk, manually adjusted brake is installed on each main wheel. Hydraulic fluid under pressure pushes eleven equally spaced pistons against a non-rotating disk. This action compresses a disk assembly. Half of the disks rotate with the tire. The other half, spaced alternately between the rotating disks, are non-rotating. Each non-rotating disk is sintered iron, which provides friction against the steel rotating disks. The rotating disks are held in place by means of retainer blocks, which are fastened to the wheel assembly. Compressing the disks provides the braking action by pressing the non-rotating and rotating disks together against a final non-rotating disk which cannot move. Eleven brake release spring-loaded devices are fastened to the inner non-rotating disk. When hydraulic pressure is released from the piston, the spring-loaded device pulls the disk away, and the wheel is allowed to turn freely.

Controls and Indicators

A two-position (NORM-EMER) toggle switch, located on the pilots' center instrument panel selects the hydraulic system to be used to actuate the brakes. The NORM position selects hydraulic system Nr 2 pressure. The EMER position selects hydraulic system Nr 3.

Two 26 volt AC hydraulic brake pressure indicators, adjacent to the brake pressure selector switch, give a visual indication of available brake pressure. Operation of the indicators is dependent upon the position of the brake selector switch. If the brake selector switch is positioned to NORM, the upper (NORM) brake pressure indicator registers the brake pressure available from hydraulic system Nr 2. If the switch is positioned to EMER, the lower (EMER) indicator registers the pressure available from hydraulic system Nr 3.

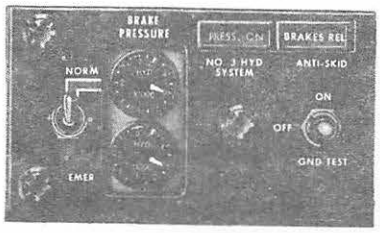

BRAKE PRESSURE AND ANTI-SKID PANEL

Normal Brake System

The normal brake system is activated by Nr 2 hydraulic system pressure which is controlled by one side of each of the two dual pilot metering valves, and by the four dual anti-skid valves. The pilot metering valves are located under the flight station floor. The pilot metering valves apply pilot hydraulic pressure to the anti-skid valves located on the left and right brake panels in the cargo compartment. Hydraulic pressure is then routed to the brake assemblies.

Brake Selector Valves

The brake selector valves, which are solenoid-operated, are de-energized open, and are controlled through the brake selector switch. The valves are wired electrically through the brake selector switch so that, in the NORM position, the emergency selector valve is energized closed. In the EMER position, the emergency brake selector valve is de-energized open and the normal brake selector valve is energized closed. If there is a power failure, both valves will direct pressure to the pilot brake metering valves.

Pilot Brake Metering Valves

There are two of these metering valves: one valve is for the right wheel brakes, and the other is for the left wheel brakes. One valve of each dual valve assembly is connected to emergency pressure and return. Each dual valve assembly consists of two identical piston and sleeve metering assemblies, which are fitted into the dual-bore housing. Both pistons are actuated at the same time by a bell-crank assembly; however, brake pressure is effective only through one valve, depending on the position of the brake selector valve. The valve is mechanically actuated through linkage from the brake pedals.

Anti-Skid Valves

The eight anti-skid valves are solenoid controlled. When the anti-skid system detects a skid or locked wheel condition, the valve is energized and ports brake pressure to return. As soon as the wheel starts to speed up again, the valve is de-energized and braking action is re-applied. Metered fluid from the pilot brake metering valve enters the anti-skid valve. The fluid is directed to the top of the control piston. As pressure builds up on the top of the control piston, the piston is forced downward to overcome the control spring. This movement unseats the metering poppet, which ports hydraulic pressure to the brake.

The amount of poppet opening depends on the pressure from the pilot brake metering valve. When a rapid deceleration is detected by the skid detector and amplified in the control box, a signal is sent to the step 1 solenoid on the valve. When this solenoid is energized, metered fluid to the control cylinder is blocked. This action opens the system return passage, metered fluid is relieved, and the wheel picks up speed. If a locked wheel condition occurs, both step 1 and step 2 solenoids are energized. System inlet pressure forces the preload piston upward, opening the poppet valve. The pressure from the brake is then "dumped" into the system return line, and the wheel is free to turn until the detector signal de-energizes the solenoids. The valves are located on the brake valve panel.

Hydraulic Fuses

There are eight hydraulic fuses in the normal brake system. Without such protection, the failure of a hydraulic line or component downstream from the valve could cause complete loss of fluid in the system.

Shuttle Valve

The shuttle valve consists of a piston which is free to move from one side of the valve to the other; thus, if hydraulic pressure is greater on the normal brake pressure end, the piston moves to the emergency brake pressure end and seats. This prevents normal pressure from entering the emergency lines. If emergency brake pressure is greater than normal brake pressure, the piston will move to the normal inlet and seat, closing off the normal lines. Pressure then cannot enter the normal brake pressure lines.

Emergency Brake System

In the event the normal brake system fails, the brake selector switch on the brake and anti-skid panel can be moved to EMER to engage the emergency brake system.

Hydraulic pressure for the emergency wheel brake system is supplied by the electrically driven pumps of hydraulic supply system Nr 3 and is independent of the positions of the landing gear selector valves. The pressurized fluid applied to the brakes is routed through a set of main metering valves. The control pressure for metering the pressure applied to the brakes is routed to the main metering valves through the pilot brake metering valves.

The anti-skid brake control system is inoperative when the emergency brake system is being used.

Two accumulators in hydraulic supply system Nr 3 provide a standby emergency wheel brake system when the electrically driven pumps of hydraulic supply system Nr 3 are inoperable. A minimum of approximately ten brake applications can be made with both accumulators fully charged.

NOTE: In case of DC electrical power failure, the de-energized valves admit both system Nr 2 and system Nr 3 hydraulic pressures to the brake system. The shuttle valve is positioned by the system supplying the greater pressure.

Parking Brake

The parking brake is set by depressing the brake pedals, and pulling the T-handle on the pilot's instrument panel. The T-handle is connected by a flexible shaft to mechanical linkage. When the pedals are depressed, the brake linkage applies pressure to the pilot brake dual metering valves and, at the same time, allows the parking brake to lock the pedals in the depressed position. This action keeps hydraulic pressure applied to the brake metering valves. The parking brakes can be released by depressing the brake pedals.

Anti-Skid System

A fail-safe anti-skid brake control system provides maximum braking efficiency and prevents locking of the wheels in the event excess brake pressure is metered by the pilot during any phase of ground operation above 15 knots. The system is energized by a switch located on the pilots' center instrument panel.

The ON position of the switch is effective only if the brake pressure switch is in the NORM position. When this condition is satisfied, the ON position arms the 28 volt DC anti-skid circuits; and when both main gear struts are depressed, the circuits are completed through the touchdown circuit to provide anti-skid braking. The GND TEST switch position is a momentary position and provides a means of testing the anti-skid system for

fail-safe operation. Holding the switch in the GND TEST position while applying brakes will result in the following sequence of events: brakes release, the DET OUT and ANTI-SKID OFF lights come on, and braking action gradually returns.

Brakes Released Light

A green, BRAKES REL light is provided on the brake pressure and anti-skid control panel on the pilot's center instrument panel. Illumination of this light with the landing gear handle in the down position and the anti-skid switch ON, advises the pilots that the anti-skid locked wheel circuit will prevent brakes being applied until wheel spin up after touchdown. This light does not sense brake pressure, but is illuminated by an electrical signal through the anti-skid control box. If the light does not illuminate, locked wheel protection is not available at touchdown and there is a possibility of blown tires if the pilot applies any amount of brakes prior to, or immediately after touchdown.

The BRAKES REL light receives power from Main DC Bus Nr 1, through the ANTI-SKID circuit breaker of circuit breaker panel Nr 4. Ground test of the light circuit is made by placing the anti-skid control switch to ON, normal brakes selected and annunicator test switch at TEST, at which time the light should illuminate.

Anti-Skid Operation

The skid control system is primarily based on controlling the skid in its beginning stage. Braked wheel speed is converted to an AC signal which is proportional to the wheel acceleration and deceleration. The signal is supplied to a control box on the left side of the cargo compartment. The control box detects, from the AC input signal from the detector, both excessive wheel deceleration and non-rotation. The control signals are transmitted to the anti-skid control metering valve, where brake hydraulic pressure is reduced by metering action until wheel speed is restored. The valve then begins to increase brake hydraulic pressure at a gradual predetermined rate until either skid control action is repeated or the pressure demanded by the pilot is reached.

If the pilot demands sufficient braking action to cause skidding, the skid control system will apply and release the brake pressure, as necessary, to obtain a nearly constant braking action without skidding. The resultant braking action gives maximum stopping action. Locked wheel control provides skid protection for any wheel which may be off the runway.

Anti-Skid Fail-Safe

Fail-safe action prevents prolonged brake release in the event of the malfunction of the anti-skid system. Warning lights inform the pilot that the skid control system has malfunctioned or that the system is off. ANTI-SKID OFF lights, one on the pilot's instrument panel and one on the copilot's instrument panel, indicate two or more wheels have lost braking action due to anti-skid malfunction. When this happens, the skid control system turns itself off, and the brakes are under manual control. The pilot may also obtain this condition by turning the ANTI-SKID switch to OFF. The DET OUT lights, located on the pilot's and copilot's instrument panels, indicate that there is a continuous brake release action on one wheel only. Skid control is provided over a speed range covering the maximum landing speed to a minimum taxi

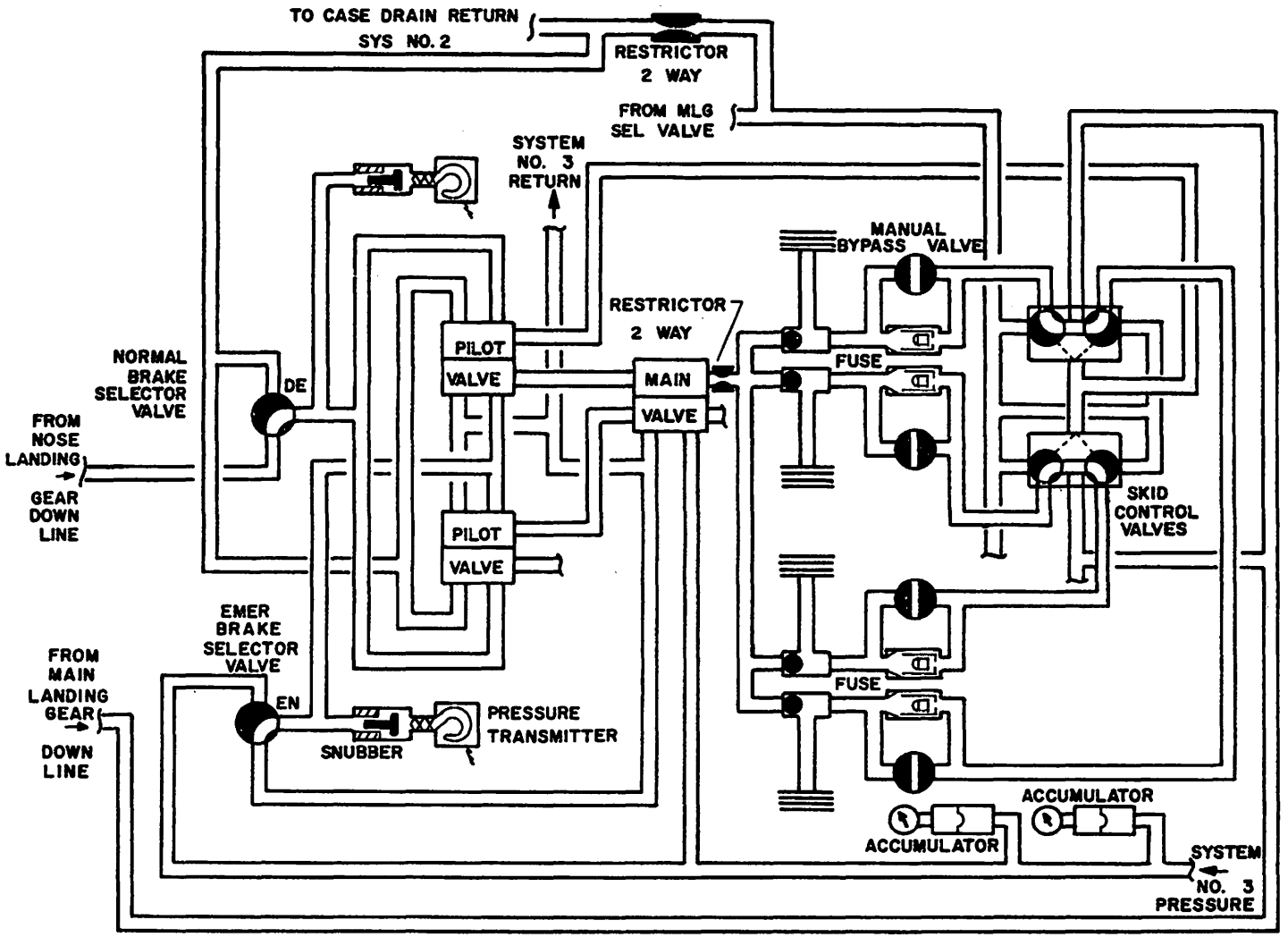
TO CASE DRAIN RETURN
SYS NO. 2
RESTRICTOR
2 WAY
FROM MLG
SEL VALVE
SYSTEM
NO. 3
RETURN
MANUAL
BYPASS VALVE
RESTRICTOR
2 WAY
PILOT
VALVE
MAIN
VALVE
FUSE
NORMAL
BRAKE
SELECTOR
VALVE
DE
FROM
NOSE
LANDING
GEAR
DOWN
LINE
SKID
CONTROL
VALVES
PILOT
VALVE
EMER
BRAKE
SELECTOR
VALVE
FROM
MAIN
LANDING
GEAR
DOWN
LINE
EN
SNUBBER
PRESSURE
TRANSMITTER
FUSE
ACCUMULATOR
ACCUMULATOR
SYSTEM
NO. 3
PRESSURE

speed of approximately 15 knots. Below 15 knots the anti-skid system is inoperative.

Skid Detector

The skid detector is a small alternator which supplies an AC signal to the control box. The output of this alternator is low, since only signal voltage is supplied to the control box for amplification. The detector is located in the landing gear axle and fastens to the axle nut. The detector splined shaft (coupling) slips into a splined receptacle on the wheel dust cap. The rotor of the detector, therefore, turns with the wheel. Any acceleration or deceleration of the wheel is transferred directly to the alternator. Any change of rotor speed causes a change in signal to the control box which may, in turn, cause a change in the operation of the anti-skid valve.

Brake System Failure

If the NORM BRAKE PRESSURE indicator shows a loss of system pressure, check that the Nr 3 HYD SYSTEM PRESS ON light is illuminated. Place the brake pressure selector switch to the EMER position. This will supply pressure to the brakes from the Nr 3 hydraulic system. Use the brakes cautiously because anti-skid system is inoperative when pressure is supplied by the Nr 3 hydraulic system.

If a leak exists at the brake assembly below the shuttle valve, use of the emergency brakes may deplete the Nr 3 hydraulic system.

Anti-Skid System Failure

If any one skid detector fails, the DET OUT lights will illuminate and anti-skid protection will be available only on the remaining seven wheels. If two or more skid detectors fail, the ANTI-SKID OFF lights will illuminate and skid protection will be lost on all wheels. If the ANTI-SKID OFF light illuminates, the anti-skid switch should be placed to the OFF position to prevent possible erratic operation of the normal brakes.

Brake Limitations

The brakes are limited in the amount of work they can perform and still function properly. A measure of the amount of heat absorbed by the brakes is the amount of work performed by the brakes. The amount of work done is the kinetic energy expended, measured in millions of foot-pounds per brake. The amount of heat added to the brakes for each braking effort is cumulative and is determined by the speed of the aircraft and the gross weight at the time the brakes are applied. See Sections 3, 5 and 7 of T.O. 1C-141A-1 for detailed information and charts.

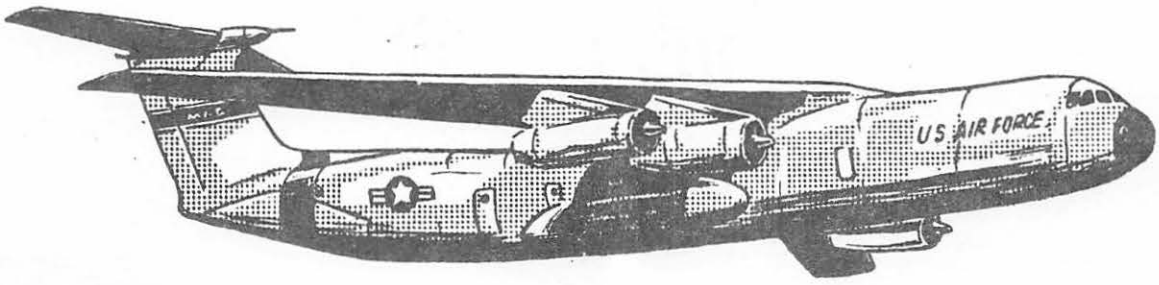

Chapter 5

CARGO DOOR AND RAMP SYSTEM

The cargo door and ramp system is used for ground loading and aerial delivery. The system consists of an internal pressure door, ramp, petal doors, and operating control. The system is operated by Nr 3 hydraulic system. In flight, the system is operated from the pilot's and copilot's paradrop and ADS panels. Ground operation is controlled from the cargo door and ramp control panel after the system is armed from the pilot's controls and door selection is made at the pilot's panel or the door and ramp control panel. The pressure door may be individually controlled from the forward crew door interphone and PA panel, or the cargo door and ramp control panel.

Pilot's Controls and Indicators

The pilot's controls and indicators are located on the pilot's paradrop and ADS control panel. The petal door opening is 65 degrees. The DOOR ARMING switch is a two-position OFF - ARM toggle lock switch that is set to ARM to energize the system. The ALL DOORS switch is a three position OPEN - OFF - CLOSE switch that initiates system operation. Five indicator lights on the panel (EXTERNAL CL, INTRANSIT, PRESS OPEN, PETAL INTMD, PETAL OPEN) illuminate to indicate door status.

Copilot's Controls and Indicators

The copilot's controls and indicators are located on the copilot's paradrop and ADS panel. The controls and indicators consist of an ALL DOORS switch and five indicator lights which are identical to those on the pilot's panel. However, the pilot's ALL DOORS switch has priority over the copilot's switch and can override any door movement initiated by the copilot.

Navigator's Indicator

A cargo doors OPEN light on the navigator's ADS and jump light panel illuminates when the cargo doors are open to the position selected on the pilot's control panel.

Cargo Compartment Controls and Indicators

Controls and indicators for the system are located on the forward crew door and interphone panel and on the cargo door and ramp control panel. The PRESS DOOR ONLY switch on the crew door interphone and PA panel is a three-position OPEN - OFF - CLOSE guarded switch. Arming of the system will be indicated when the DOORS ARMED indicator on the panel illuminates, and the pressure door may then be opened with this switch. The door may be closed with the switch only if the external cargo doors are closed and locked. The pilot's and copilot's ALL DOORS switches will override any operation initiated by this switch. The IN TRANSIT and ALL OPEN lights on the panel illuminate during system operation to indicate door status.

Ground Operations

The cargo ramp has two positions for ground loading. With ramp supports installed, the ramp can be used for truck bed height loading. Removal of the ramp supports allows

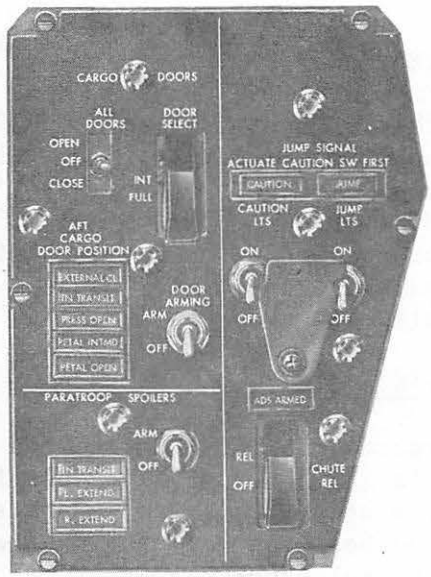

PILOT'S

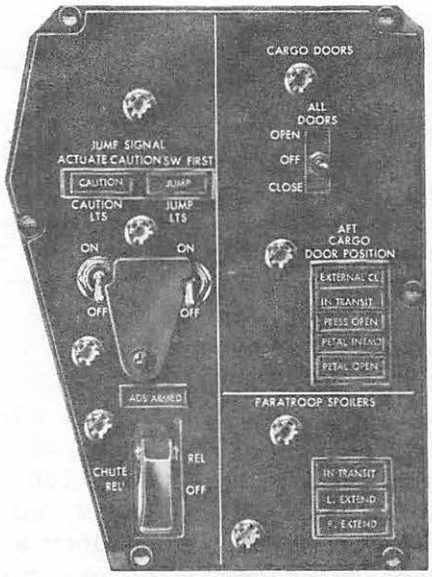

CO-PILOT'S

PARADROP AND ADS CONTROL PANEL

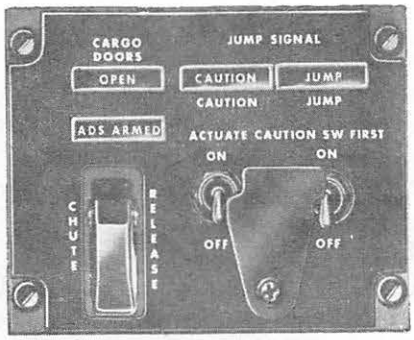

NAVIGATOR'S

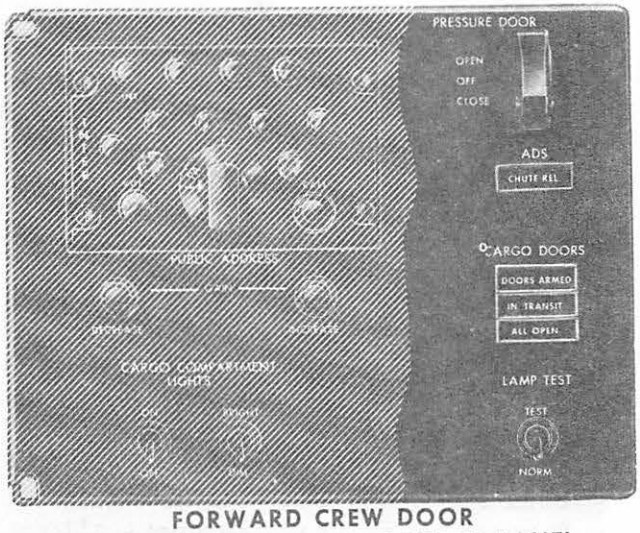

FORWARD CREW DOOR
INTERPHONE AND PA CONTROL PANEL

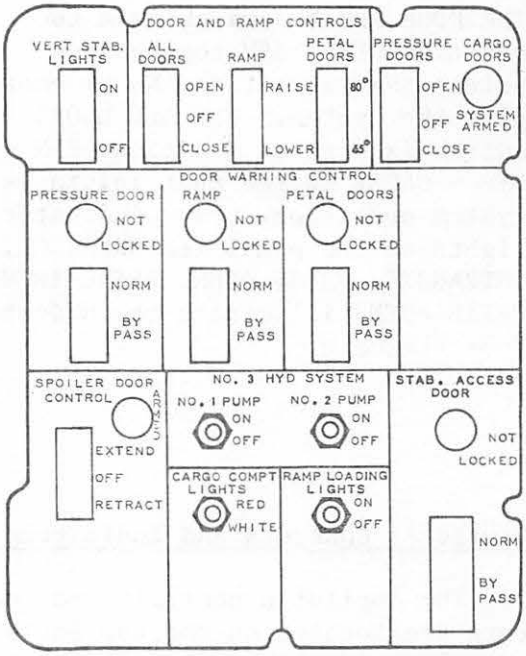

CARGO DOOR CONTROL PANEL

the ramp to be lowered to the ground for loading operations.

To open the cargo doors and ramp while the aircraft is on the ground, proceed as follows:

CAUTION

To prevent damage to the petal doors, assure that no obstructions are within the opening envelope of the petal doors during operation.

CAUTION

Prior to opening of the pressure door, remove and stow the two cam jacks and disconnect and stow the seven auxiliary pressure door latches.

NOTE: If the doors must be opened and the pilot's door arming switch has not been placed to OFF, the switch must be placed to OFF and back to ARM in order to deactivate the holding relay.

1. With electrical power on the aircraft and the Nr 1 PUMP or Nr 2 PUMP switch on the flight engineer's hydraulic systems control and indicator panel set to RAMP CONTROL, set Nr 1 PUMP or Nr 2 PUMP switch on the Nr 3 HYD SYSTEM section of the cargo door and ramp control panel to ON.

2. Set the DOOR ARMING switch on the pilot's paradrop and ADS control panel to ARM.

CAUTION

When operating the cargo door system automatically with the ALL DOORS switch in the OPEN or CLOSED position, and the manual override button on a valve is actuated to operate a unit out of sequence, the ARM switch must be placed in the OFF position until the manual override button is released.

3. Select petal door opening positions as follows:

NOTE: Air conditioning and cargo compartment floor heat must be off prior to unlocking and opening the pressure door.

Set PETAL DOORS switch on the cargo door ramp control panel to 65°.

For 80-degree opening. Set the PETAL DOORS switch on the cargo door and ramp control panel to 80°.

4. Set ALL DOORS switch on the cargo door and ramp control panel to OPEN.

When the cargo doors and ramp are open, if it is necessary to adjust the cargo ramp loading height, proceed as follows:

5. Momentarily set the RAMP switch on the cargo door and ramp control panel to RAISE until the load is relieved from the ramp supports.

6. Release the ramp supports and stow them in the stowage tubes.

7. Manipulate the RAMP switch to adjust ramp height to desired loading level.

CAUTION

Aft-end ramp loading limit is 4,000 pounds in any intermediate position when the ramp is not on the ground or supported by the ramp supports.

To close the cargo doors and ramp while the aircraft is on the ground, proceed as follows:

CAUTION

To prevent damage to the ramp latches and pressure door latch stirrups, visually check to insure ramp latches and pressure door latch stirrups are free of foreign objects prior to operating the doors and ramp.

8. Place RAMP switch to RAISE and raise the ramp to the horizontal position. Connect the ramp supports.

9. Lower ramp until ramp supports bottom.

10. Place the ALL DOORS switch to CLOSE. The IN TRANSIT lights should illuminate until all doors are closed and locked, at which point all DOOR OPEN lights and the IN TRANSIT lights extinguish.

11. As the pressure door closes and locks, observe that all door seals are properly positioned, and that the pressure door moves aft slightly.

NOTE: Do not return the door arming switch to OFF until after the cam jacks have been installed.

12. Install the two cam jacks between the cam jack cup assemblies on the cargo ramp floor and the forward lower edge of the pressure door. Actuate the jacks with hand pressure only.

13. Visually check through the pressure door seal latch view ports that the pressure door latch hooks are properly engaged on the ramp stirrup fittings. The green alignment marks on the pressure door hooks should be aligned with the alignment marks on the shoulders of the stirrups when the pressure door is closed and locked.

WARNING

If visual inspection reveals that any of the latch hooks are not properly engaged in the ramp stirrups, rigging maintenance must be performed prior to pressurized flight. Exact marking alignment is determined by sighting from a 37° angle.

14. Check that the green portion of each door locked indicator is visible.

15. Install the seven auxiliary pressure door latches.

NOTE: These latches will have slack and will not be carrying any load.

16. Check the ramp latches by observing the indicators to be properly positioned and a physical check of the hooks will be made by feeling locks.

17. Place the PETAL DOORS switch to 65°.

18. Place the DOOR ARMING switch on the pilot's paradrop and ADS control panel to OFF.

Inflight Operations

CAUTION

The ramp supports must be connected to prevent ramp extension below the horizontal position if it is to be opened in flight. Overtravel in flight can result in damage to the ramp or ramp actuators.

Observe placard speed when opening door in flight.

To open the ramp and doors while the aircraft is in flight, proceed as follows:

1. Place the door arming switch on the pilot's paradrop and ADS panel to ARM.

   The FULL position open the petal doors to 65-degrees (ADS) position.

WARNING

Air conditioning and cargo compartment floor heat must be OFF prior to unloading and opening the pressure door.

CAUTION

When operating the cargo door system automatically with ALL DOORS switch in the OPEN or CLOSED position, and the manual override button on a valve is actuated to operate a unit out of sequence, the ARM switch must be placed in the OFF position until the manual override button is released.

2. Unlock and stow the seven auxiliary pressure door latches.

3. Remove and stow the two cam jacks.

4. Place the ALL DOORS switch to OPEN.

NOTE: To close the doors and ramps proceed as follows:

5. Place the ALL DOORS switch to CLOSED and hold until the ALL DOORS or the PETAL INTMD lights extinguish.

6. As the pressure door closes and locks, observe that all door seals are properly positioned, and that the pressure door moves aft slightly.

NOTE: Do not return the door arming switch to OFF until after the cam jacks have been installed.

7. Install the two cam jacks between the cam jack cup assemblies on the cargo ramp floor and the forward lower edge of the pressure door. Actuate the jacks with hand pressure only.

8. Visually check through the pressure door seal latch view ports that the pressure door latch hooks are prop-

erly engaged on the ramp stirrup fittings. The green alignment marks should be aligned with the alignment marks on the shoulders of the stirrups when the pressure door is closed and locked.

WARNING

If visual inspection reveals that any of the latch hooks are not properly engaged in the ramp stirrups, pressurized flight is not recommended. Exact marking alignment is determined by sighting from a 37° angle.

9. Check that the green portion of each door locked indicator is visible.

10. Install the seven auxiliary pressure door latches.

NOTE: These latches will have slack and will not be carrying any load.

11. Check the ramp latches by observing the indicators to be properly positioned and a physical check of the hooks will be made by feeling each lock mechanism.

12. Place the DOOR ARMING switch to OFF.

13. Pressurize the aircraft as desired.

Power Off Operation
General

Power off operation of the cargo doors and ramp system requires two crew members: One to operate the cargo door and ramp system control switches or the manual override control valves, and the other to operate the hydraulic handpump.

Air conditioning and cargo compartment floor heat should be off prior to unlocking, opening and closing the pressure door.

Power Off Operation
Hydraulic Pump Failure
Both Pumps in Nr 3 System

With electrical power available at the cargo door and ramp system control panel the system may be operated in the following manner:

TO OPEN:

1. System ARMED light ON.

2. Hold the ALL DOORS switch on the cargo door and ramp control panel to the OPEN position.

3. Operate the hydraulic handpump to unlock and open the pressure door, unlock and lower the ramp, and unlock the petal doors.

4. With the petal door locks in the unlocked position, insert the petal door handcrank into the petal door actuator and manually crank the doors to the desired position.

TO CLOSE:

1. System ARMED light ON.

2. Insert the petal door handcrank into the petal door actuator and crank the doors to the closed position.

3. Hold the ALL DOORS switch on the cargo door and ramp control panel to the CLOSE position.

4. Operate the hydraulic handpump to lock the petal doors, raise and lock the ramp, and close and lock the pressure door.

Power Off operation
Loss of Electrical Power

With the loss of electrical power, the switches on the cargo doors and ramp control panel and both hydraulic pumps in the Nr 3 system will be inoperative. In this situation it will be necessary to use the manual override valves and the hydraulic handpump to operate the cargo doors and ramp system.

CAUTION

It is necessary that the following sequence be observed during this type of operation. After Door Sequence - Press Selector Valve Manual Override Buttons in the Sequence Shown:

TO OPEN:

1. Pressure door to CLOSE - Hold.

2. Pressure door lock to UNLOCK - Release Nr 1.

3. Pressure door to OPEN.

4. Ramp to UP - Hold.

5. Ramp lock to UNLOCK - Release Nr 4.

6. Ramp to DOWN to horizontal position.

7. Petal doors to CLOSE - Hold.

8. Petal door lock to UNLOCK - Hold - Release Nr 7.

9. Insert petal door handcrank into the petal door actuator and manually crank the doors to the desired position.

TO CLOSE:

1. Petal door lock to UNLOCK - Hold.

2. Insert handcrank into petal door actuator and crank doors closed.

3. Petal door lock to LOCK.

4. Ramp lock to UNLOCK.

5. Ramp to UP - Hold.

6. Ramp to LOCK - Release Nr 5.

7. Pressure door to OPEN - Hold.

8. Pressure door lock to UNLOCK - Hold - Release Nr 7.

9. Pressure door to CLOSE - Hold.

10. Pressure door lock to LOCK - Release Nr 9.

Chapter 6

WING FLAP SYSTEM

Wing flaps are used to change the relatively low-lift wing needed for high speed flight to a high-lift wing needed for slow landing and takeoff speeds. This is accomplished by changing the camber and area of the wing. The flaps are double-slotted Fowler-type and consist of two sections on each wing. They are extended or retracted by jackscrew actuators operating from a torque tube drive which is connected to a gear box driven by two hydraulic motors powered by Nr 2 and Nr 3 systems.

Position Indicator

The wing flap position indicator is a 28 volt DC Selsyn type located on the pilots' center instrument panel. The indicator is calibrated in percent of travel in increments of ten percent. (100% equals 45 degrees.)

Wing Flap Lever

The wing flap lever, on the control pedestal, has three detent lock positions, placarded: FLAPS UP, TAKEOFF-APPROACH, and LANDING. Additional markings are provided for the 25 percent (of fully extended) and 50 percent positions. Any percentage of fully extended flaps can be selected with the lever. A spring-loaded friction brake locks the lever in position once a selection has been made. The aft edge of the lever knob must be tilted upward to release the brake.

In conjunction with the flap lever, there is a lockout solenoid controlled by the spoiler lever which adds approximately 50 pounds force to the flap handle anytime the spoiler lever is out of the closed position in flight. A micro switch at the LANDING position of the flap lever energizes the landing gear warning horn (which cannot be silenced) anytime the flap lever is in the LANDING position and the landing gear is not down and locked.

Flap Drive Gearbox

The flap drive gearbox is located on the aft side of the rear wing beam. Most of the components in the flap system are installed on the gearbox assembly.

Control Selector Valve

The selector valve is a tandem valve which provides a synchronized flow from each hydraulic system to the flap drive motors. The valve has an orifice type damper to control the rate of pilot input motion which prevents excessive surges in the system.

Hydraulic Motors

Two identical motors installed on the gearbox drive the flaps up or down in 15 seconds. If only one system is used, the flaps will travel at half speed or take 30 seconds for full travel in either direction. Each motor has a brake which is released by hydraulic pressure and applied by springs.

Manual Shutoff Valve

Mounted on the gearbox is a manually operated shutoff valve which shuts off both system pressures for maintenance, servicing or to isolate the system in flight. To operate, pull down on handle and rotate 180 degrees to the closed detent position.

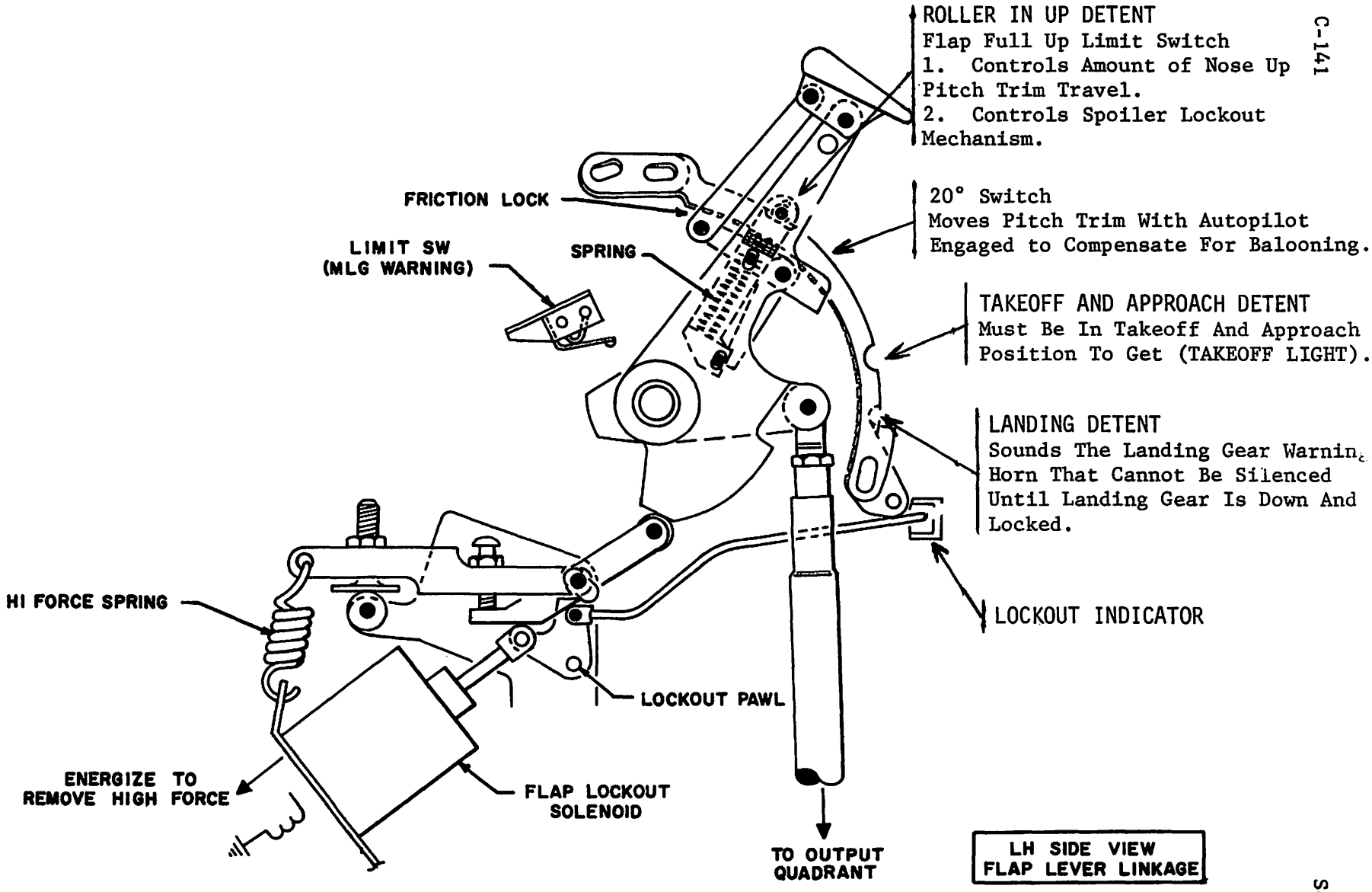

WING FLAP LEVER

Manual Isolation Shutoff Valve

The manual isolation shutoff valve is located on the right side of the gearbox in the Nr 3 system pressure line to provide a means of ground testing the flaps on Nr 2 system through the interconnect valve. It may also be used in flight to isolate the Nr 3 hydraulic system.

Flow Control Valves

There is one flow control valve in each return line to prevent overloading of either system and overspeeding of the hydraulic motors.

Limit Switch Assembly

There are three limit switches contained in a single housing driven by the left hand inboard flap panel. The Full Up Switch has two functions: (1) It controls the spoiler lockout mechanism, and (2) it increases the maximum nose up trim from 8 degrees to 12.5 degrees when the flaps are extended. The 20 Degree Switch has one function, it increases the autopilot gain for nose down trim to prevent ballooning as flaps are extended. The Takeoff and Approach Switch (34°) has one function. It is one of the items that completes the circuit to the green TAKEOFF light on the pilot's instrument panel.

Asymmetry System

The asymmetry system compares the movement of the flap panels symmetrically (outboard to outboard, etc.), and stops flap movement if either set of panels get out of synchronization 3 degrees or more. After an asymmetry condition and shutoff has occured, it cannot be reset in flight.

Flap Asymmetry Light

A FLAP ASYM light on the annunciator panel goes on if the flap asymmetry system has caused the flaps to be locked. The light also illuminates if a malfunction causes at least one of the solenoid-operated, spring-loaded torque tube brakes to engage, or causes the solenoid-operated hydraulic shutoff valve to close. Under the malfunctioned condition, illumination of the light indicates only that the flaps are locked; they may or may not be in an asymmetric condition.

Flap Asymmetry Detector Light

A FLAP ASYM DET light on the annunciator panel goes on if there is an electrical power failure in the flap asymmetry system, or if the DEFEAT switch on the flap asymmetry test panel is positioned to DEFEAT.

Asymmetry Detectors

There is one asymmetry detector for each flap panel which is driven by a sprocket and chain from the flap panel itself. Each one sends a comparison signal to the computer amplifier which compares the signals and trips the shutoff valve to the flap motors if an unsymmetrical condition exists. An asymmetry brake on the outboard end of each torque tube is also applied by the computer amplifier when an unsymmetrical condition exists locking the torque tube. Resetting of the brakes can be accomplished on the ground only.

Broken Cable Detector

The broken cable detector is at the input quadrant to the flap drive gearbox on the cable from the flap

lever. Should the cable break, the detector would trigger the flap asymmetry shutoff valve cutting the pressure off from both the Nr 2 and Nr 3 systems stopping the flaps and preventing uncontrollable flap operation. In this case the asymmetry brakes would not be triggered.

Flap Asymmetry Test Panel and Lights

In the APU compartment is a test panel whereby the asymmetry system can be tested for malfunctions. It is also used when resetting the system after an asymmetry condition has existed. Two lights on the annunciator panel at the pilots' station warn of an actual asymmetry condition and if there is a detector out or an electrical malfunction.

NOTE: Operation of the TEST switch with the DEFEAT switch in the NORM position will result in tripping of the torque tube brakes and closing of the shutoff valve, and will require manual resetting of the flap asymmetry system.

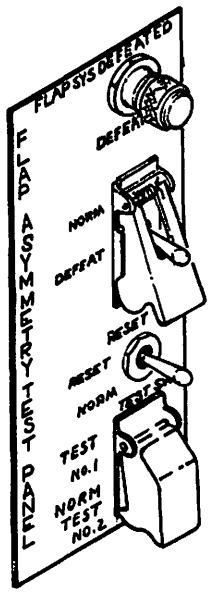

LOCATED INSIDE
APU COMPARTMENT

Flap System Failure

Flap system malfunctions can result from loss of electrical power, loss of hydraulic power, or asymmetrical operation.

Loss of electrical power to the flap asymmetry detection system will be indicated by illumination of the FLAP ASYM DET light on the annunciator panel. This light will also illuminate if a flap asymmetry detector malfunctions. The flaps will continue to operate after illumination of the FLAP ASYM DET light, but without protection against an asymmetrical condition.

WARNING

When operating the flaps without asymmetrical protection, the flap lever should be moved in small increments to prevent an uncontrollable condition in the event of asymmetrical extension or retraction.

If in flight the flaps are not fully retracted, the spoilers shall not be deployed under any circumstances.

CAUTION

The life of the wing flap motor-driven gearbox is significantly reduced, under single motor operation, if a complete flap cycle is attempted more frequently than one cycle every five minutes. The limit for dual motor operation is one cycle every two minutes.

WARNING

Wing flaps shall not be extended unless the spoilers are fully closed and locked.

Resetting Wing Flap Asymmetry System

NOTE: Placing the power select switch to OFF prior to shutdown of the APU will prevent tripping the wing flaps asymmetry system. If tripping should occur, it will be necessary to reset the system in accordance with the procedures listed below.

If inadvertent tripping of the wing flap asymmetry system occurs, reset the system as follows:

1. Close Manual Shutoff Valve.

2. Position the DEFEAT switch (in the APU compartment) to DEFEAT.

3. Manually reset both flap drive asymmetry brakes in the wings.

4. Manually reset the hydraulic shutoff valve at the drive gearbox. Then reset the computer amplifier from the wing flap asymmetry test panel by assuring the TEST switch is in NORM and holding the RESET switch in RESET.

5. The flaps asymmetry detection system is restored to normal by releasing the RESET switch and placing the DEFEAT switch to NORM.

6. Open Manual Shutoff Valve.

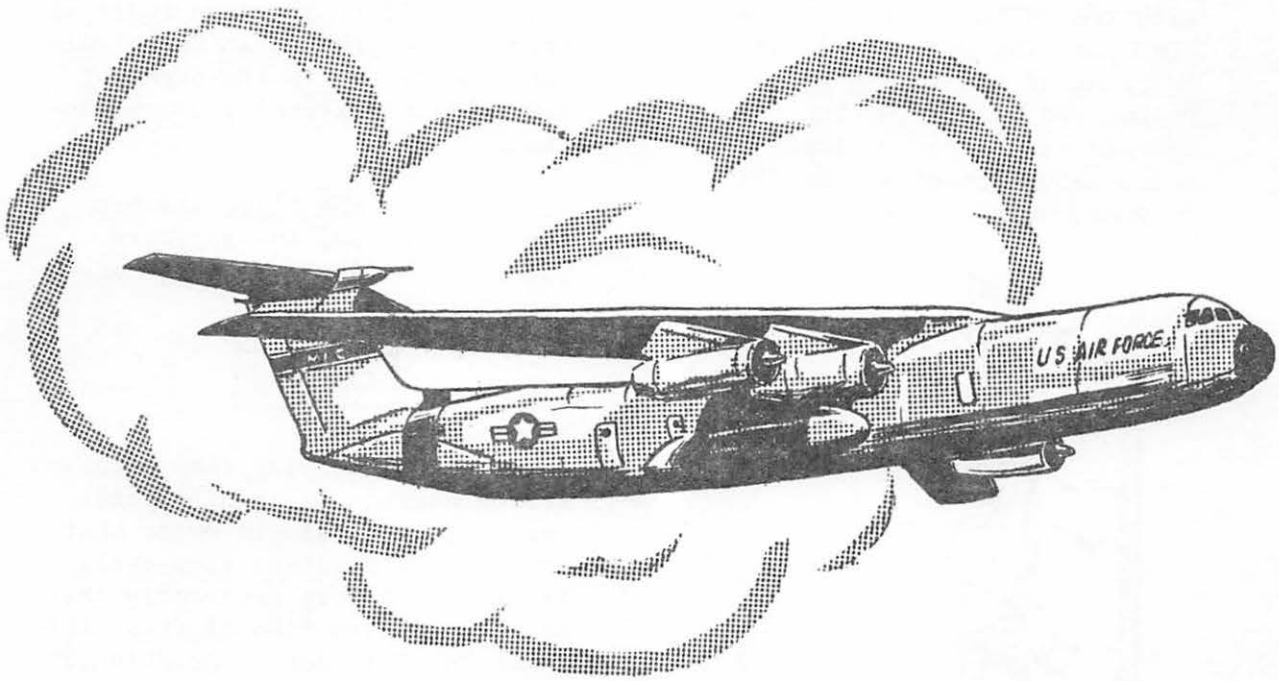

Chapter 7

WING SPOILER SYSTEM

General

The spoilers are used to reduce speed, shorten landing ground roll and increase rate of descent.

There are a total of thirty-six spoiler panels on the wings; eighteen upper and eighteen lower. There are five upper and five lower panels on the inboard wing section of each wing and four upper and four lower panels on the outboard wing section of each wing.

All spoilers are extended at the same rate and at the same time to produce aerodynamic drag and reduce wing lift.

Spoilers are operated by hydraulic systems Nr 2 and Nr 3 through a dual power control assembly located on the rear wing beam at the junction of inboard and outboard spoiler panels on both wings. Each dual power control assembly has two actuators connected to push-pull rods for inboard and outboard spoiler operation. Each spoiler panel is individually connected to the push-pull rods by cable and quadrant assemblies.

On the ground, there are both automatic and manual modes of operation. In flight, there is manual operation only, with an asymmetry system to prevent uneven operation during initial extension.

Spoiler Deployment Limits

Spoiler panel deflections are limited in the extreme open and closed positions by mechanical stops in both ends of the inboard and outboard cylinders. On the ground, the upper panels open to 90 degrees and the lower panels to 86 degrees. In flight, the upper panels open to 27 degrees and the lower panels to 59 degrees.

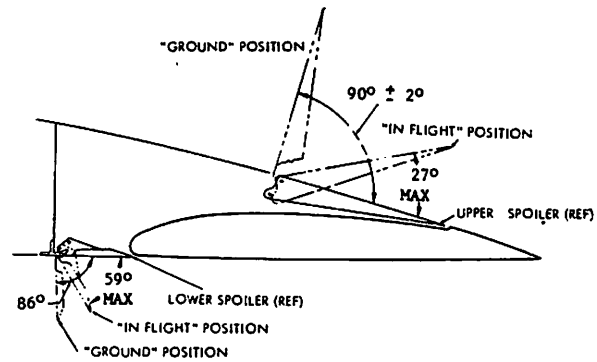

Spoiler Indicators

One indicator with dual pointers and a flag is installed on the pilots' center instrument panel. The pointers are marked L and R, and the dial face is marked CLOSED and GRD. The flag is marked LOCKED and UNLKD.

A spoiler ARMED light and a GROUND light on the pedestal, plus a 2 SPOILER INOP and a 3 SPOILER INOP light on the annunciator panel indicate the condition of the system.

Spoiler Control Lever

The spoiler control lever is located on the control pedestal between the flap lever and the pilots' throttles. It is connected to the spoiler cable servo by push rods. The control lever has three detents, CLOSED, FLIGHT LIMIT, and GROUND. Spoiler RESET position is forward of and spring loaded to the CLOSED position.

To prevent inadvertent operation of spoilers while flaps are extended, a lock out solenoid controlled by the flap up limit switch adds approximately

WING SPOILER LEVER

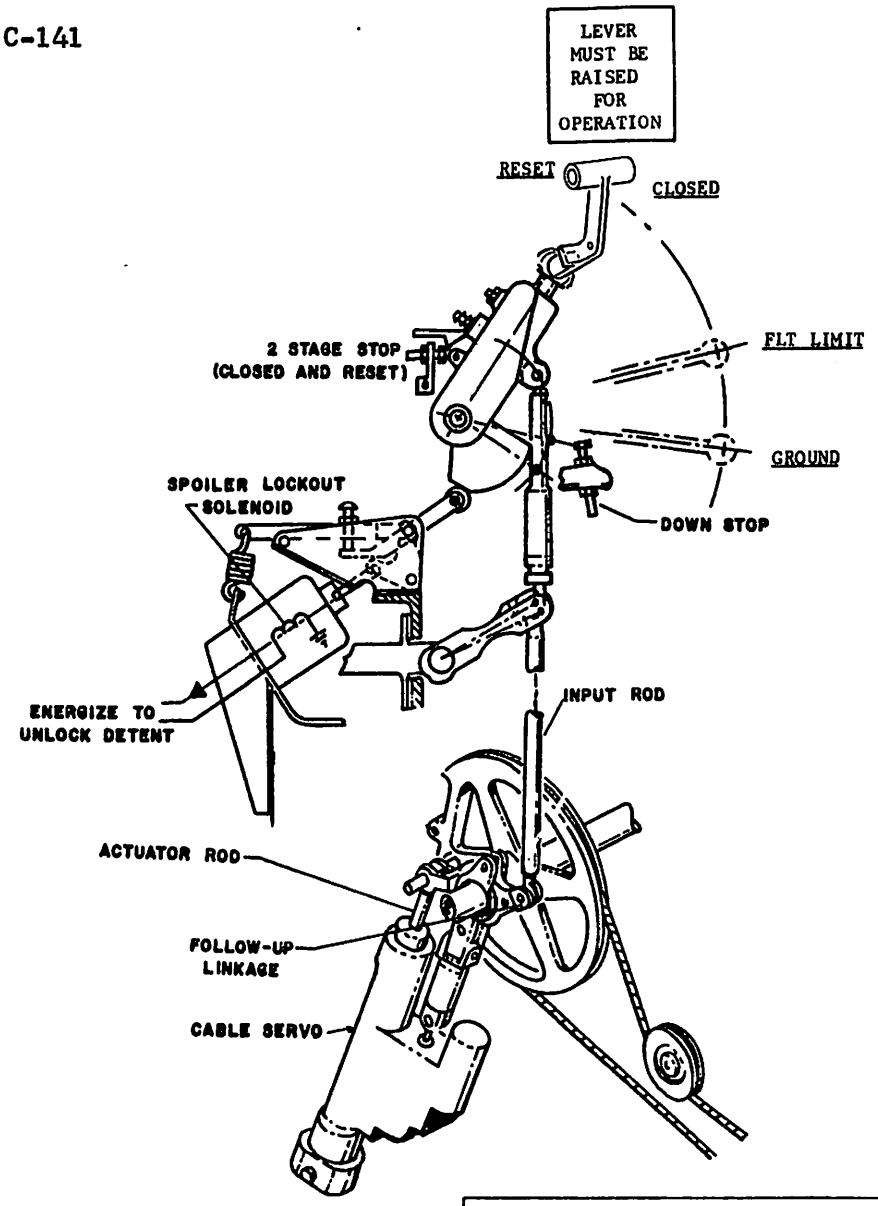

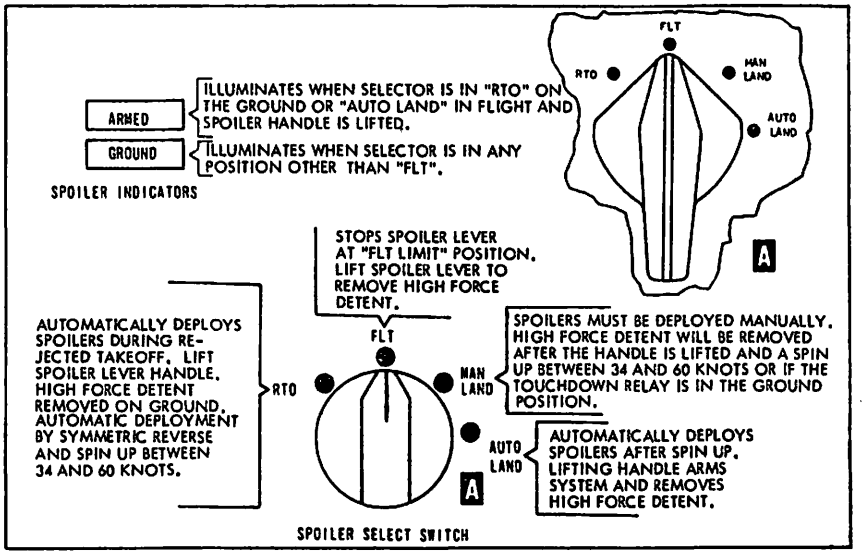

50 pounds force to the spoiler lever when the flaps are out of the full up position.

The top portion of the spoiler lever slides up and down in the bottom section and must be lifted for all operations.

Movement of the spoiler control lever out of the CLOSED position starts hydraulic system Nr 3 pumps, when hydraulic system Nr 3 is not pressurized and the pumps are not operating.

Spoiler Cable Servo

The spoiler cable servo is located under the control pedestal and is used for automatic modes of operation, smooth operation, and to reduce pilot effort for spoiler control. Movement of the spoiler control lever positions control valves allowing hydraulic systems Nr 2 and Nr 3 pressure to drive a single loop cable run which positions the selector valves in the dual power control assemblies for spoiler operation.

Spoiler Dual Power Control Assemblies

The dual power control assemblies are located on the rear wing beam at the junction of inboard and outboard spoiler panels. Each assembly contains two dual tandem actuating cylinders, main and auxiliary, which operate inboard and outboard push-pull rods.

In flight, with the landing gear control lever in the GEAR RETRACTED position, both hydraulic systems Nr 2 and Nr 3 drive all spoiler panels open or closed.

With the landing gear control lever in the GEAR EXTENDED position, hydraulic system Nr 2 pressure drives the inboard spoiler panels, top and bottom, while hydraulic system Nr 3 pressure drives the outboard spoiler panels.

In the event either hydraulic system fails, both inboard and outboard spoiler panels will automatically operate from the remaining hydraulic system at a reduced rate of speed.

Spoiler Select Switch

The spoiler select switch is located on the control pedestal forward of the spoiler control lever. There are four selections:

RTO - Rejected Takeoff
FLT - Flight Limit
MAN LAND - Manual Land
AUTO LAND - Automatic Land

For automatic modes of operation, spoiler control lever must be raised to arm system.

Selecting RTO, MAN LAND or AUTO LAND, illuminates the GROUND light. Raising the spoiler control lever to the ARMED position when the selector switch is in the RTO or AUTO LAND position illuminates the ARMED light. Both lights are located adjacent to the spoiler select switch.

Spoiler Operation

Rejected Takeoff

Spoiler select switch is positioned to RTO on Lineup Check List illuminating the GROUND light. Spoiler control lever is raised to ARM system, ARMED light illuminates, and high force detent (spoiler lock out solenoid) is removed to permit automatic deployment.

The spoilers will deploy automatically to the ground position when throttles Nr 1 and Nr 4, or Nr 2 and Nr 3, or all four, are retarded to REVERSE IDLE position and the forward main landing gear wheels are rotating 34 to 60 knots and above. Wheel spin-up signal is received from the anti-skid detectors in the four forward wheels

through the wheel detector control box (Nr 2 service center).

Spoilers may be closed after roll out by manually repositioning the spoiler control lever to the CLOSED position.

Flight

High force detent remains removed and the ARMED light remains illuminated until spoiler control lever is disarmed (pushed down) after gear control lever is placed in the UP position.

Spoiler select switch is left in the RTO position until the pilot calls for: "After Takeoff and Climb Check List."

With spoiler select switch in the FLIGHT position all automatic spoiler extension circuits are inoperative. Spoilers can be extended manually only to the FLIGHT LIMIT position due to the mechanical flight limit stop, which is actuated by the spoiler select switch shaft. This prevents the spoiler control lever being moved past the FLIGHT LIMIT position.

CAUTION

Insure that spoiler select switch is in the detent and aligned with the FLT position in order to insure correct positioning of the flight limit stop.

WARNING

The spoiler select switch must not be moved from the FLT position during flight, except when preparing to land, to prevent inadvertent deployment to the ground position.

The spoiler lever will not be armed until after the landing gear is safely on the runway.

WARNING

Anytime the SPOILER SELECT switch is in the AUTO LAND position and the spoiler handle is lifted, the spoilers are armed for auto deployment to the ground position whether the ARMED light is illuminated or not. Forward main wheel spin-up will then deploy the spoilers. This presents an extremely hazardous situation during takeoff or an emergency return with the gear remaining extended and during a go-around should momentary contact with the ground occur. Application of the wheel brakes with gear extended or retraction of landing gear will stop wheel rotation.

Manual Land

Spoiler select switch is positioned to MAN LAND on the Before Landing Check List, illuminating the GROUND light. After touchdown, or with forward main wheel spin-up 34 to 60 knots and above, the high force detent is removed and the spoiler control lever may be manually moved to the GROUND position.

Auto Land

Spoiler select switch is positioned to AUTO LAND on the Before Landing Check List, illuminating the GROUND light. After touchdown, lifting the spoiler control lever will automatically position the spoiler lever to the GROUND position. The high force detent is removed permitting spoiler deployment, on touchdown, or when forward wheel spin-up is 34 to 60 KCAS and above, the spoiler control lever automatically

moves to GROUND position and spoilers deploy.

Blow Down System

Relief valves in the spoiler system prevent structural damage when excessive airloads occur on spoiler surfaces. Blow down range is between 250 and 350 KCAS. Maximum airspeed operation is 350 KCAS or 0.75 Mach.

Asymmetry System

In the event the spoilers get five degrees out of synchronization, the spoilers will close and the control lever will remain where it was. This protection is present during the first 2½" of travel only. The system is protected by two switches in each wing controlling Nr 2 and Nr 3 hydraulic system pressure, and will illuminate the 2 and 3 SPOILER INOP lights on the annunciator panel. To reset, move the lever slightly forward of the CLOSED position to the RESET position.

Spoiler Asymmetry Lights

The 2 SPOILER INOP and 3 SPOILER INOP lights are located on the annunciator panel. The lights illuminate when the solenoid operated asymmetry pilot valves are de-energized by either the asymmetry detectors, the EMER RETRACT switch or the EMER OFF switch.

Illumination of only one light indicates that an electrical malfunction has occurred in the hydraulic system asymmetry control circuit. The spoilers will remain fully operational with one light illuminated.

Both lights illuminated indicate that an asymmetric condition has occurred and hydraulic pressure has been routed to close the spoilers. Placing the spoiler lever to RESET extinguishes the lights if they have illuminated as a result of an asymmetric condition.

Emergency Retract, Emergency Off Switch

A three-position EMER RETRACT, NORM, EMER OFF switch on the control pedestal can be used to retract the spoilers if they cannot be retracted with the spoiler lever.

The EMER RETRACT is a spring-loaded momentary position and simulates an asymmetrical condition which de-energizes the solenoid operated asymmetry pilot valves on the Nr 2 and Nr 3 hydraulic systems to retract the spoilers. The SPOILER INOP lights will illuminate and all modes of operation will be inoperative until the spoiler lever is moved to the RESET position.

The EMER OFF position is a lever locked position, and with the spoilers closed, will prevent deployment of the spoilers, either manually or automatically. Hydraulic systems Nr 2 and Nr 3 are shut off at the spoiler actuators through the inlet shutoff and bypass valves. The 2 SPOILER INOP and 3 SPOILER INOP lights also illuminate. If the spoilers are deployed when the switch is placed in this position, only Nr 2 hydraulic system power is shut off at the spoiler actuators. Nr 3 hydraulic system remains ON to close the spoilers. When the spoilers close, the Nr 3 system is automatically shut off. If the spoilers move from the closed position, Nr 3 system is again automatically energized to close them. If system Nr 3 control switches are in the OFF position, the pumps will stop when the spoiler lever is returned to the CLOSED position.

In the NORM position, normal spoiler circuitry is restored and the spoil-

ers may be operated in manual or automatic modes as desired after resetting.

Asymmetry Test Panel

This panel on the copilot's side console is used to test the circuit and lights without triggering the asymmetry system.

Under Spoiler Speed Light

With spoiler select switch in FLT position, lifting the spoiler lever to ARM, or out of the CLOSED position, while a stall signal is present in the stall prevention system circuits, illuminates an UNDER SPLR SPEED warning light on the annunciator panel and sounds an intermittent warning note on the maximum speed audible warning system through the headsets.

Loss of Electrical Power

Spoilers are inoperative with loss of electrical power.

WARNING

Under no circumstances should the spoilers be deployed in flight unless the flaps are fully retracted.

If any complete set of spoiler panels (i.e., LH inboard, LH outboard, RH inboard, or RH outboard), fails to close and lock, the flaps shall not be extended under any circumstances.

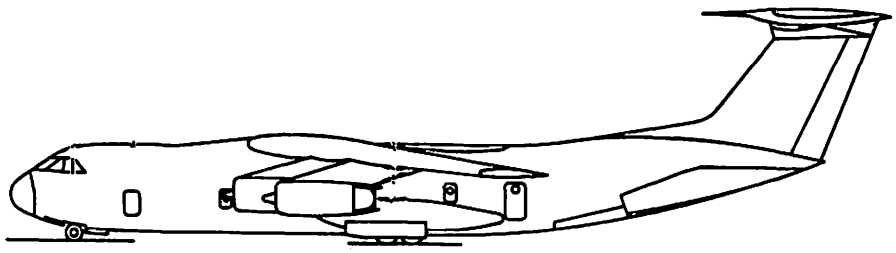

Chapter 8

PITCH TRIM SYSTEM

The horizontal stabilizer is the pitch trim control surface. Pitch trim is accomplished by moving the control surface to change the angle of attack. The pitch trim supplements elevator control but is completely independent of elevator control movement.

Maximum trim limits are 4 degrees aircraft nose-down regardless of wing flap position, 8 degrees aircraft nose-up if flaps are fully retracted, or 12.5 degrees nose-up if the wing flaps are not fully retracted. The system has two modes of operation, and three modes of control.

The pitch trim system uses a jackscrew and nut arrangement as its two modes of operation. The jackscrew is driven by an ELECTRIC MOTOR and produces rather slow changes in pitch trim while the nut is driven by a HYDRAULIC MOTOR powered by hydraulic system Nr 2 and causes trim changes about five times as fast as the electric mode.

Position Indicator

The position indicator is located on the pilots' center instrument panel, and is calibrated in degrees of stabilizer travel for aircraft nose-up and nose-down.

Controls

There are three pitch trim control sets. One set is electric switches on the outboard grip of each ailron control wheel for electro-hydraulic control. A lever on each side of the lower control pedestal is for mechanical hydraulic control and one set of electrical switches on the control pedestal are for electrical pitch trim control.

Electro-Hydraulic Pitch Trim Switch

Two electro-hydraulic pitch trim switches located on the outboard grips of the pilots' control wheels operate a control solenoid, routing hydraulic pressure to drive the nut on the jackscrew. The switches are recessed to provide a guard against inadvertent operation of the switches.

These dual switches must be operated simultaneously to provide both power and ground for one solenoid of an electro-hydraulic pitch trim control valve which ports hydraulic pressure to the appropriate side of the pitch trim hydraulic motor. The circuitry is designed so that opposing signals from pilot and co-pilot cancel each other.

To initiate electro-hydraulic actuation of pitch trim, the dual switches are pushed up with the thumb for nose-down trim and pulled down for nose-up trim. The switches are spring-loaded to a center (OFF) position.

Pitch trim rate when the system is actuated by these switches is 0.4 degree per second. Switch operation automatically disengages the autopilot if it is operating when the trim change is made, requiring the autopilot to be reset. Nose-up trim is interrupted if a stall signal is present in the stall prevention system.

Hydraulic Pitch Trim Lever

A hydraulic pitch trim lever is located on each side of the control pedestal just below and outboard of each set of throttle levers. A flow control valve operated by a mechanical cable system from these control levers initiates

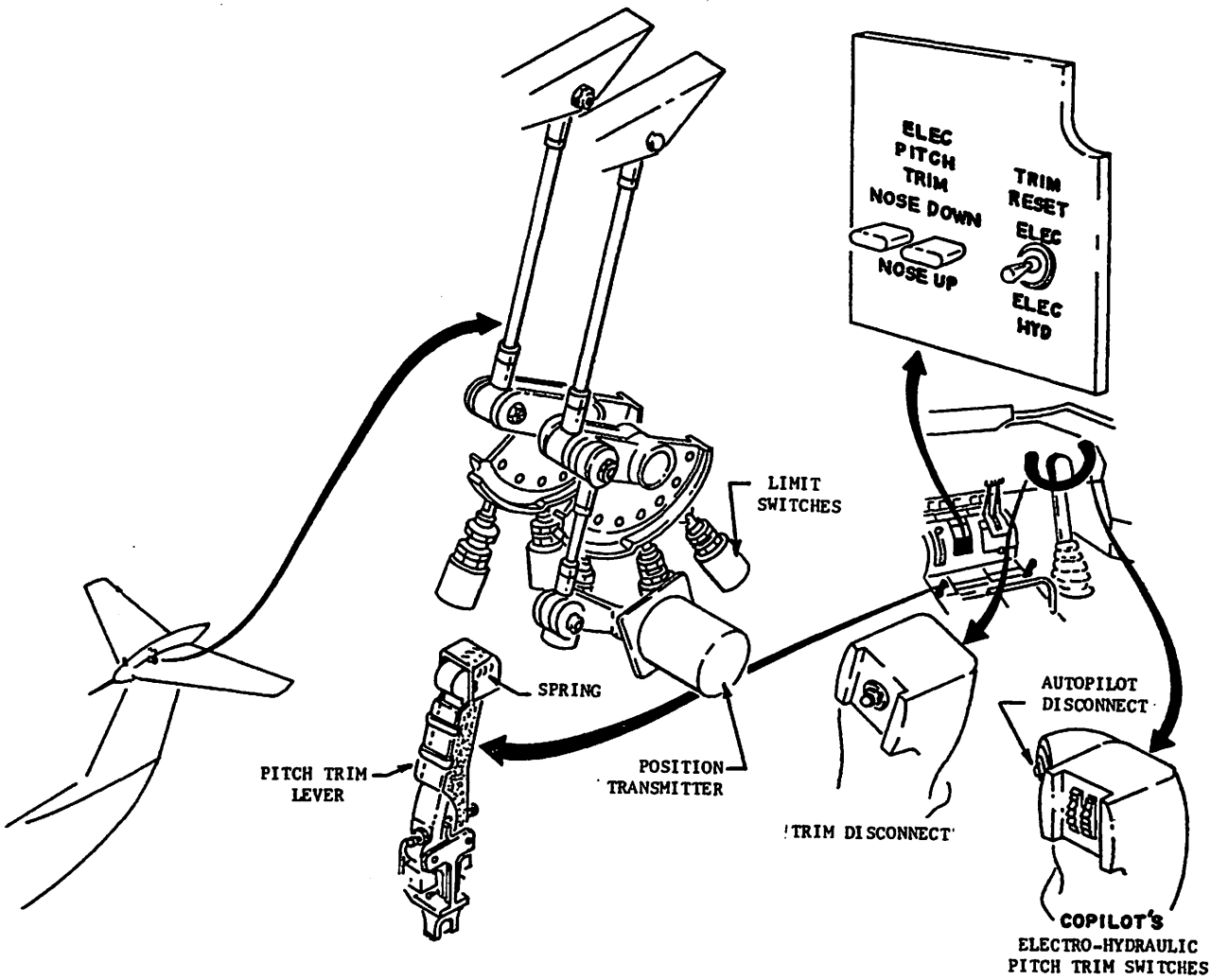

PITCH TRIM CONTROL SWITCHES

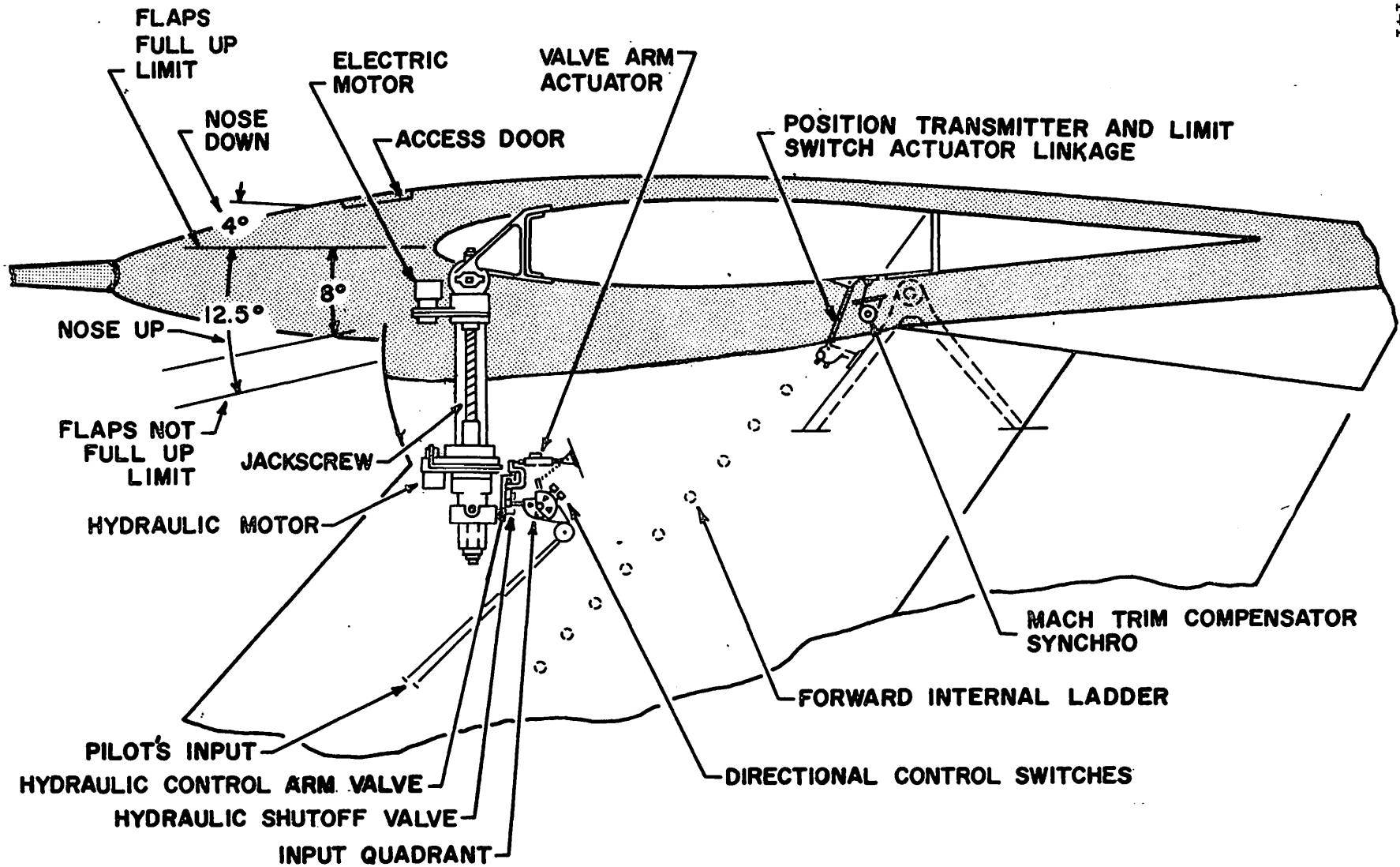

PITCH TRIM INSTALLATION

hydraulic operation to provide a maximum trim rate of 0.4 degree per second of stabilizer travel. Hydraulic power is provided only when the electrical switches, incorporated on the trim levers, are actuated.

Depressing the lever switches, or an electrical power failure, allows the valve to open, and so permits hydraulic operation of the system by the levers. When the autopilot pitch axis is engaged, movement of the hydraulic pitch trim lever will disengage the autopilot, requiring the autopilot to be reset.

Electrical Pitch Trim Switches

Two electrical pitch trim switches are located on a panel under the center portion of the throttle quadrant on the control pedestal. The dual switches must be operated simultaneously to provide both power and ground to one clutch in the trim power unit.

For electrical actuation of pitch trim, both switches are moved up for nose-down trim or down for nose-up trim. The switches are spring-loaded to a central (OFF) position.

Pitch trim rate when the system is actuated by these switches is 0.08 degree per second. If the autopilot pitch axis is engaged, the switches are inoperative and the autopilot must be disengaged to operate the electrical pitch trim system.

Electrical Pitch Trim Disconnect Buttons

A TRIM DISC button on each pilot's control wheel provides disconnect, through relays, of electrical and electro-hydraulic pitch trim in the event of a runaway trim condition.

Pressing the button disconnects power from the electrical pitch trim motor and the magnetic clutches, and disconnects power from the electro-hydraulic pitch trim control valve.

Hydraulic pitch trim will still be available through use of the hydraulic pitch trim levers.

Electrical and Electro-Hydraulic Pitch Trim Reset Switch

A TRIM RESET switch will restore power to either the electrical or the electro-hydraulic pitch trim system after the TRIM DISC button has been depressed. The switch has three positions, ELEC, ELEC HYD and an unmarked, spring-loaded center OFF position.

The switch is held momentarily in the ELEC position to restore electric pitch trim after a disconnect of electric pitch trim. The switch is held momentarily in the ELEC HYD position to restore electro-hydraulic pitch trim after a disconnect of the electro-hydraulic pitch trim.

If the pitch trim system has been disconnected through use of the TRIM DISC button, resetting of only one mode will not restore operation of the other mode. Both modes, ELEC and ELEC HYD, must be reset to restore both modes of operation.

Chapter 9

FLIGHT CONTROL SYSTEMS

The aircraft is controlled by hydraulically powered aileron, rudder, and elevator systems. Aerodynamic lateral control is available through a cable-controlled aileron tab if hydraulic pressure is lost. Electrically operated trim systems are provided for trimming the aircraft about the roll, yaw, and pitch axes. Both a manually operated, hydraulically powered trim system and an electrically operated, hydraulically powered trim system are also provided for the pitch axis.

WARNING

Never purposely remove hydraulic assistance from the flight controls to simulate power control assembly failure (except aileron control failure).

Jammed Flight Controls

The aileron and elevator control interconnects between the cable tension regulators have one shear fuse rivet and the artificial feel springs have one shear fuse rivet. The rudder artificial feel spring also has one shear fuse rivet. All of these shear rivets are designed to shear at a pilot force above the maximum control operation forces and below forces that the control systems were structurally designed to withstand.

Aileron Control System

Each aileron is normally actuated by a dual power control assembly which is controlled by the pilots' control wheels and is powered by the Nr 1 and Nr 2 hydraulic systems. The travel limits of the ailerons are 25 degrees up and 15 degrees down from the faired positions. Components of the aileron control system are: the pilot's and copilot's control wheels, cable systems and linkages, tension regulators, an input quadrant, an autopilot servomotor, power control assemblies, aileron servotab lockout actuators, control switches and lights on the pilots' overhead panel and warning lights on the annunciator panel.

Dual Power Control Assembly

The power control assemblies hydraulically actuate the ailerons in response to input control movements from either pilot's control wheel, the autopilot servomotor, or the aileron electric trim actuator. In each power control assembly, one of the dual actuators is powered by the Nr 1 hydraulic system and the other actuator is powered by the Nr 2 hydraulic system. During normal operation, each actuator provides one half of the force required to operate the attached aileron; however, either actuator is capable of providing the entire operating force if the hydraulic system to the other actuator fails.

The left and right aileron power control assemblies move simultaneously but in opposite directions. If one aileron becomes inoperable, the SYS 1 and SYS 2 control switches for that aileron can be placed in the POWER OFF positions to isolate hydraulic pressure from the power control assembly actuating cylinders of the inoperable aileron; the operable aileron can then function normally.

A controlled leakage arrangement at each hydraulic system section of the servo valve permits approximately one gallon per minute flow of fluid through

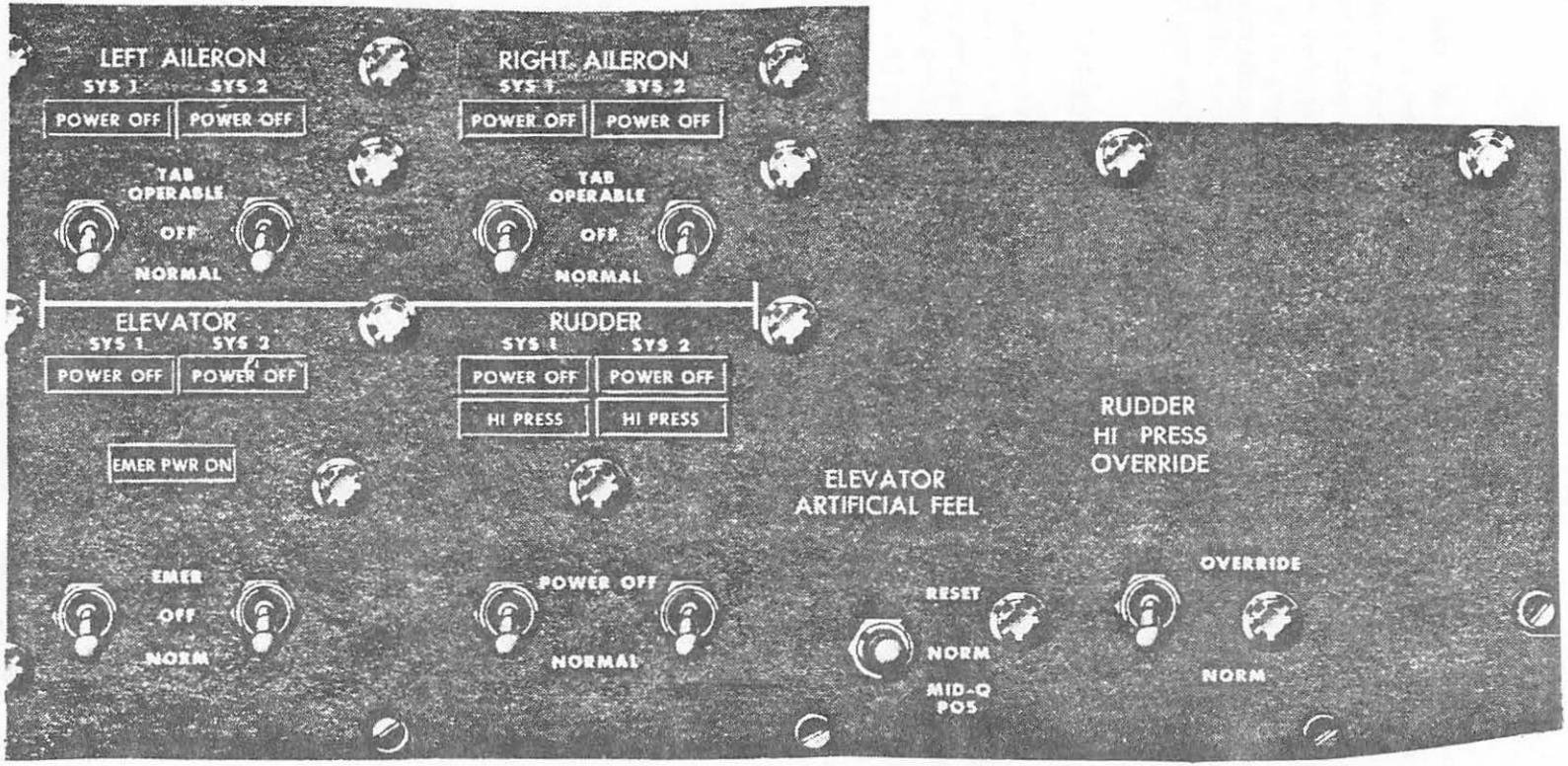

FLIGHT CONTROLS SECTION OF THE PILOTS' FORWARD OVERHEAD PANEL

the valve when the valve is in the neutral position and the hydraulic systems are pressurized. This provides a continuous supply of warm fluid to the actuators, located in an unheated area of the aircraft, to prevent sluggish operation of the power control assembly. A power control assembly is mounted on the aft side of the rear beam in each wing, forward of the aileron.

Pilot's and Copilot's Control Wheels

The U-shaped control wheels which control operation of the ailerons and servotabs are individually connected by concealed cables to a separate tension regulator input quadrant beneath the flight deck. The pilot's and copilot's input quadrants are interconnected by a pushrod and cranks on the quadrants. This interconnection causes the control wheels and dual control cable systems to operate in unison; it allows operation of both control cable systems with either of the control wheels; and it also permits the pilots to combine their efforts during manual operation of the ailerons.

Aileron Power Control Switches

Four three-position NORMAL - OFF - TAB OPERABLE lever-lock type aileron switches on the pilots' forward overhead panel control the motor operated shutoff and bypass valves of the power control assemblies and select tab operation.

The NORMAL position of each switch causes the related system Nr 1 or Nr 2 shutoff and bypass valve of the corresponding power control assembly to open and port fluid to the servo flow control valve.

The OFF position closes the valve, discontinuing the supply of hydraulic pressure to the servo flow control valve. The OFF position also opens the shutoff valve bypass to connect the two ends of the actuator to each other and to the return line, permitting the actuating piston to move freely with aileron surface movement.

The TAB OPERABLE position of each switch performs the same function as the OFF position as far as the power control assemblies are concerned. When TAB OPERABLE is selected with either the two left or the two right aileron power control switches the corresponding aileron tab becomes operable. Placing either the two left or the two right, or all four, power control switches to TAB OPERABLE, energizes the pumps of hydraulic system Nr 3 and energizes the corresponding solenoid operated tab lock valve, opening the valve to port system Nr 3 pressure to the related tab lockout actuator. Actuator movement adjusts the tab input linkage with the result that control wheel movement can be transmitted to the tab.

Aileron System Power Off Lights

Two 28 volt DC POWER OFF lights for the left aileron power control assembly and two for the right aileron power control assembly are located on the pilots' forward overhead panel, above the aileron power control switches. The lights illuminate if the respective system pressure drops to approximately 1500 psi within the related power control assembly. A pressure switch downstream of each aileron system shutoff valve controls the associated light.

Aileron System 1 Power and Aileron System 2 Power Lights

An AILERON SYS 1 PWR and an AILERON SYS 2 PWR light on the annunciator panel illuminate if the respective hydraulic system pressure drops to approximately 1500 psi within at least one of the power control assemblies. The POWER

OFF lights on the pilots' overhead panel indicate which control assembly has suffered a loss of hydraulic pressure. The AILERON SYS 1 PWR and AILERON SYS 2 PWR light will remain illuminated for as long as the system pressure within either power control assembly is below 1500 psi. Subsequent power failure of the system in the remaining power assembly will be visually evidenced only by the related POWER OFF light. The AILERON SYS 1 PWR and AILERON SYS 2 PWR lights are controlled by the pressure switches which control the related POWER OFF lights.

Aileron Tab Operable Lights

Two 28 volt DC lights, a R AIL. TAB OPER and a L AIL. TAB OPER light, are provided on the annunciator panel to give positive indication when the corresponding aileron tab linkage is in the operable configuration. A limit switch, actuated by movement of the related tab linkage lockout actuator, controls the associated light.

Normal System Operation

During normal operation, the LEFT and RIGHT AILERON SYS 1 and SYS 2 control switches on the pilot's overhead panel are in the NORMAL positions. The position of the ailerons is controlled by the pilot's or copilot's control wheel or by pilot or copilot inputs to the aileron trim system. Movement of the control wheels is transmitted aft by dual cable and linkage systems to a common input quadrant assembly mounted on the aft side of the center wing rear beam. The input quadrant assembly can also receive input motions from an aileron electric trim actuator and an autopilot servomotor.. A spring cartridge attached to the input quadrant "feeds back" an artificial "feel" resisting force to the control wheels to simulate the "feel" of the aerodynamic loads that resist the movement of the ailerons. Without this "feel" the pilots have no way to guage the amount of control surface loading during normal powered operation. During normal flight operation, the aileron servotabs are locked so they move and remain faired with the ailerons.

Operation With One Hydraulic System

If either the Nr 1 or Nr 2 hydraulic system is inoperable, the LEFT and RIGHT AILERON SYS control switches for the inoperable hydraulic system are placed in the OFF positions to actuate the shutoff and bypass valves in the power control assemblies. The ailerons can then be controlled in the same manner used for normal operation with the system that is still functioning.

Aileron Tab Lockout Actuator

When the LEFT and RIGHT AILERON SYS 1 and 2 control switches on the pilots' overhead panel, are in the NORMAL positions the servotabs remain faired with the ailerons during normal operation of the ailerons. When the Nr 1 and Nr 2 hydraulic systems are depressurized and the power control assemblies are inoperable, the LEFT and RIGHT AILERON SYS 1 and 2 control switches are placed in the TAB OPERABLE positions to start the Nr 3 hydraulic system pumps and also open a solenoid valve in each wing to admit Nr 3 hydraulic system pressure to the aileron tab lockout actuators.

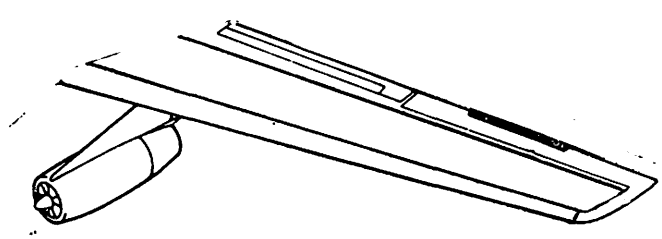

WARNING

The aileron tab lockout system is not to be used for landings, except in emergency conditions. For training purposes, this system may be used in simulated landings at altitudes of 5,000 to 20,000 feet, in the range of 150 to 250 KCAS. When the system is so used it should be activated and deactivated one aileron at a time. As the system is activated on either aileron, the aircraft will roll to that side. If an aileron tab has been unlocked and will not return to the locked-out position, leave the aileron power control switches in TAB OPERABLE for the affected aileron and continue flight. With one aileron powered and one aileron on manual tab, roll capability is degraded, particularly in the direction which requires lifting the TAB OPERABLE wing. Only shallow banks should be made. Due to roll off which occurs when hydraulic power is removed from an aileron, it is recommended that transfer to TAB OPERABLE be accomplished between 250 and 150 KCAS.

It is not desirable to land the aircraft with one or both ailerons unpowered, particularly during gusty wind or crosswind conditions. The crosswind landing capability under these conditions is unknown. In order to reduce exposure to a possible unstable aileron condition to a minimum, re-application of hydraulic power to an aileron being flown in the tab operable condition should be delayed until the airplane is in the approach configuration and in the traffic pattern. Roll control will be reduced slightly compared to the normal powered aileron case because of the tab motion.

Aileron Trim System

The aileron trim system allows the pilot to correct for a wing low or wing high condition. The trim system consists of an actuator assembly which is mounted on the wing rear beam and mechanically connected to the input quadrant assembly, and a position indicator located on the pilots' center instrument panel. The aileron trim range is 9.5 degrees up and 8 degrees down.

Aileron Trim Control Switches

Two aileron trim switches on the control pedestal trim the aircraft about the roll axis. The switches are three-position LOWER LEFT WING - LOWER RIGHT WING - OFF toggle switches. The spring-loaded center "OFF" position is unmarked. The switches must be operated simultaneously to provide both power and ground to the 115 volt AC trim actuator. Holding the switches in either position energizes the actuator jackscrew. This mechanically positions the aileron quadrant which, in turn, mechanically positions the servo flow control valves of the power control assemblies to actuate the aileron surfaces hydraulically.

Aileron Trim Position Indicator

A 28 volt DC aileron trim position indicator is on the pilots' center instrument panel. The dial of the indicator is calibrated in graduations of 1 degree from 0 to 6 (with an unmarked calibration representing 7) degrees for lower left wing and lower right wing. The aileron trim position transmitter is located on the end of the actuator assembly.

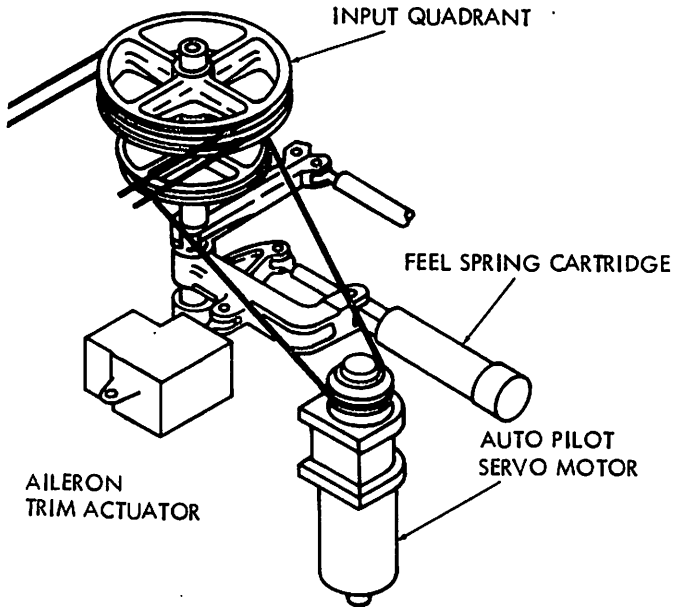

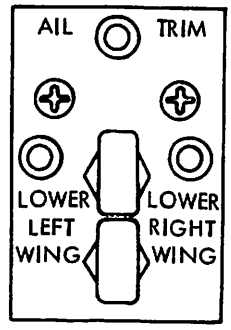

AILERON TRIM CONTROL SWITCHES

AILERON TRIM INDICATOR

AILERON TRIM SYSTEM UNITS

Rudder Control System

The rudder system uses pushrods, levers, and a dual cable system to transmit rudder pedal motion to a quadrant in the fuselage tail cone area. Dual pushrods transmit quadrant motion to levers mounted on the rudder yoke assembly and linked to a servo flow control valve of a dual hydraulic power control assembly. Linkage motion positions the servo flow control valve to actuate the rudder surface hydraulically. Feedback linkage automatically repositions the servo flow control valve to neutral, stopping movement of the rudder surface when movement of the rudder pedals stops. Pressure from hydraulic system Nr 1 and Nr 2 is normally supplied to the power control assembly. The travel limits of the rudder is 35 degrees either side of neutral.

The rudder pedals are supported by positionable arms which allow four inches forward and five inches aft adjustment. Two handcranks, one located below the pilot's instrument panel and one below the copilot's instrument panel, make this adjustment.

Rudder Power Control Switches

Two NORMAL - POWER OFF switches on the pilots' overhead panel control the supply of fluid to the power control assembly. In the event either hydraulic power system is shut off or fails, a portion of normal rudder surface deflection is lost at high airspeeds.

Rudder System Power Off Lights

Two POWER OFF lights, one for hydraulic system Nr 1 and one for hydraulic system Nr 2, are located above the rudder hydraulic systems control switches on the pilots' forward overhead panel. The lights illuminate if the respective system pressure drops to approximately 1500 psi within the power assembly. A pressure switch, installed downstream of the rudder system shutoff valve, controls the associated POWER OFF light.

Rudder System 1 Power and Rudder System 2 Power Lights

A RUDDER SYS 1 PWR light and a RUDDER SYS 2 PWR light are installed on the annunciator panel. The lights work in conjunction with the respective system POWER OFF light on the pilots' overhead panel to indicate visually low-pressure conditions in the pressure inlet lines of the power control assembly. The lights illuminate if the respective system inlet pressure drops to approximately 1500 psi. The lights are controlled by the pressure switches which control the POWER OFF lights.

Rudder System High Pressure Lights

Two HI PRESS lights, one for each half of the dual power control assembly, on the pilots' forward overhead panel, advise that high pressure is available at the related rudder actuator. The lights are controlled by the load limiting relief pressure switch associated with rudder power system Nr 1 or Nr 2. The lights are normally illuminated when aircraft airspeed is below 160 ($\pm$ 10) knots CAS.

Normal System Operation

The rudder is operated by hydraulic system Nr 1 and Nr 2 systems which supply pressure to the power control assembly. Load limiting relief valves within each half of the power control assembly relieve normal (3000 psi) hydraulic pressure to 2450 psi, maximum, rudder system operating pressure at aircraft airspeeds below 160 ($\pm$ 10) knots CAS. At aircraft airspeeds above 160 ($\pm$ 10) knots CAS, locking

pistons of the relief valves are released through the action of CADC controlled, solenoid operated pilot valves to further relieve rudder system operating pressure to 900 psi, maximum. Complete loss of electrical power deenergizes the pilot valve solenoids, which are normally energized above 160 (± 10) knots CAS, insuring that high pressure (2450 psi, maximum) is available if needed in this speed range.

A bypass feature of the motor operated shutoff valve ports return fluid directly from one side to the other side of the piston of the actuator when the valve is in the shutoff position, permitting the piston to move freely with rudder surface movement. Prior to the time the shutoff valve is closed during a hydraulic system failure, an anti-cavitation check valve within each half of the power control assembly prevents cavitation of the actuator and permits free movement of the actuating piston.

A controlled leakage arrangement at each hydraulic system section of the servo valve permits approximately one gallon per minute flow of fluid through the valve when the valve is in the neutral position and the hydraulic systems are pressurized. The system incorporates an artificial feel mechanism.

Rudder High-Pressure Override Switch

This switch, located on the pilots' overhead panel, permits selection of rudder system high-pressure if required when operating above 160 knots CAS.

Rudder System Overpressure Light

A RUDDER OVERPRESS light on the annunciator panel advises of an overpressure condition within the power control assembly. Under normal conditions the light illuminates only when aircraft airspeed is above 160 (± 10) knots CAS and high rudder system pressure is being supplied to at least one of the rudder actuators. The light is controlled by the joint action of either of the load limiting relief pressure switches and a CADC controlled 28 volt DC rudder pressure limiting relay incorporated in the system.

CAUTION

If two engines are inoperative on the same side, move the rudder high-pressure override switch to OVERRIDE when operating at speeds below 200 KCAS.

WARNING

When operating the rudder system in the high-pressure mode above 160 knots CAS, exercise extreme caution since full rudder deflection may be possible and could result in structural damage.

WARNING

If the rudder pressure reducer does not switch to the high-pressure mode when the airspeed is reduced to a minimum of 150 KCAS, place the rudder high-pressure override switch in the OVERRIDE position.

Rudder Trim System

The rudder trim system allows the pilot to correct for minor directional deviations. The system consists of an actuator assembly mounted to the aft fuselage structure, mechanically connected to the input quadrant assembly, and a position indicator located on the pilots' center instrument panel. The range of rudder trim is 6 degrees to either side of neutral; the rate is 1 degree per second.

Rudder Trim Position Indicator

The trim position indicating system consists of a DC synchro-type transmitter inside of the trim actuator and a synchro-receiver indicator located on the pilots' center instrument panel. The dial of the indicator is calibrated in graduations of one degree from zero to seven degrees for nose left and nose right.

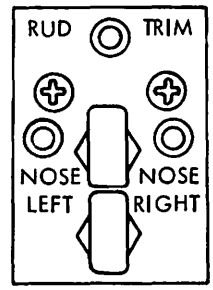

RUDDER TRIM CONTROL SWITCHES

Rudder Trim Control Switches

Two rudder trim control switches, on the control pedestal, are three-position NOSE LEFT - NOSE RIGHT - OFF toggle switches, spring-loaded to the center unmarked OFF position. The switches must be operated simultaneously to provide both power and ground to the 115 volt AC trim actuator. Holding the switches in either position, energizes the trim actuator, extending or retracting the actuator jackscrew to mechanically position the rudder quadrant. This, in turn, mechanically positions the servo flow control valve of the power control assembly to hydraulically actuate the rudder surface.

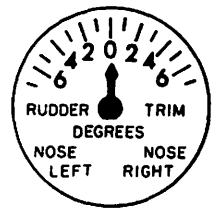

RUDDER TRIM INDICATOR

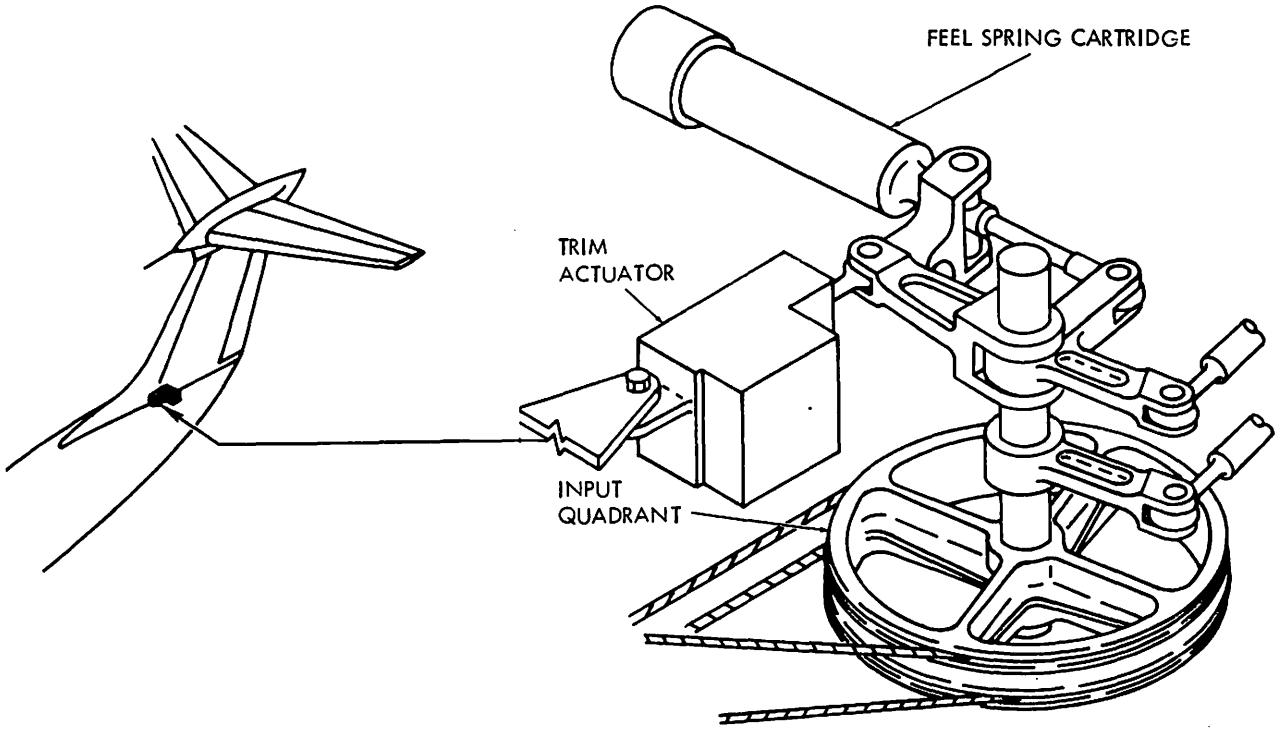

Elevator Control System

The elevators are hydraulically actuated by a power control assembly mounted between the elevator torque shafts in the bullet. During normal operation, the actuators powered by the Nr 1 and Nr 2 hydraulic systems move the elevators. If either one of the hydraulic systems becomes inoperable, the elevators could be controlled with the remaining system; however, the Nr 3 hydraulic system and the emergency actuator can be used with the system still operating to provide dual hydraulic system control. If both the Nr 1 and Nr 2 hydraulic systems become inoperable, the elevators can be controlled with the Nr 3 hydraulic system and the emergency actuator.

Elevator Control Column

During normal system operation, full control column travel forward and aft of neutral produces full elevator travel of 15 degrees down and 25 degrees up. Mechanical stops prevent movement of the control columns beyond the distances mentioned. The control columns are equipped with bob-weights which work in conjunction with the feel spring to provide control column feel for increased "g's." A single pushrod and dual cable system for each control column transmits column motions to a quadrant assembly installed in the empennage.

Elevator Hydraulic Power Control Switches

Two three-position NORM - OFF - EMER ELEVATOR SYS 1, SYS 2 lever-lock type switches on the pilots' forward overhead panel control the motor operated shutoff and bypass valves of the power control assembly. The NORM position of these switches causes the related system Nr 1 or system Nr 2 shutoff and bypass valve to open and port fluid to the servo flow control valve. The OFF position closes the shutoff valve, discontinuing the supply of hydraulic pressure to the servo flow control valve. The OFF position also opens the shutoff valve bypass to connect the two ends of the actuator to each other and to the return line, permitting the actuating piston to move freely with elevator surface movement. The EMER position performs the same function as the OFF position as far as hydraulic systems Nr 1 and Nr 2 are concerned and it also causes the emergency system (hydraulic system Nr 3) shutoff and bypass valve to open and port fluid to the emergency system servo flow control valve. The emergency system shutoff and bypass valve is energized closed when both of the switches are in any combination of the NORM and OFF positions.

Elevator System Power Off Lights

Two POWER OFF lights, one for elevator hydraulic system Nr 1 and one for elevator hydraulic system Nr 2, are above the elevator system hydraulic power control switches on the pilots' forward overhead panel. The lights illuminate if the respective system pressure drops to approximately 1500 psi within the power control assembly.

Elevator System 1 Power and Elevator System 2 Power Lights

An ELEV SYS 1 PWR light and an ELEV SYS 2 PWR light are provided on the annunciator panel. The lights illuminate if the respective system pressure drops to approximately 1500 psi within the power control assembly. The lights are controlled by the pressure switches which control the associated POWER OFF lights on the pilots' forward overhead panel.

Elevator Emergency Power On Lights

An EMER PWR ON light is provided on the pilots' forward overhead panel to give a positive indication of the adequacy of the elevator emergency system pressure when using the emergency actuator. A pressure switch controls the light.

Elevator Emergency Power Light

An ELEV EMER PWR light is provided on the annunciator panel. The light illuminates if the pressure within the emergency actuator drops to approximately 1500 psi while the emergency elevator system is being used. A pressure switch controls the light.

Normal Operation

During normal operation, the ELEVATOR SYS 1 and SYS 2 control switches, on the pilots' overhead panel, are in the NORM positions to connect the 28 volt isolated DC bus to the Nr 1 and Nr 2 hydraulic system shutoff and bypass valve motors on the elevator power control assembly. The motors drive the valves to the open positions. Also, during normal operation, the ELEVATOR ARTIFICIAL FEEL switch is in the NORM position so the artificial feel servo mechanism adjusts the amount of "feel" in the system in relation to the airspeed, air density, and air temperature variations as detected by the CADC Nr 1.

The control column movements are transmitted to a common input quadrant assembly mounted in the vertical stabilizer. The input quadrant assembly can also receive input motions from a cable connected autopilot servomotor. A spring cartridge, mechanically connected to the input quadrant assembly, "feeds back" a resisting force to the control columns to provide an artificial "feel" of the aerodynamic loads on the elevators. Moreover, the attach point of the artificial feel spring rod to the input quadrant assembly is moved and adjusted by an artificial feel servo mechanism. Without this "feel" force, the pilots have no means of gaging the amount of control surface loading. Pushrod and bellcrank linkages transmit motion from the input quadrant to the power control assembly in the bullet between the torque tube ends of the elevators.

During normal operation, the input movements to the power control assembly displace the servo valves to connect the pressure and return lines of the Nr 1 and Nr 2 hydraulic systems to the opposite ends of the actuating cylinders. The direction of actuating piston movement is determined by the direction of servo control valve displacement from the neutral position. Extension and retraction of the actuator pistons are transmitted by bellcranks and pushrods to the elevator torque tubes to move the elevators.

The main servo valve has a controlled leakage arrangement which permits approximately one gallon of fluid per minute to flow through the valve when the valve is at the valve neutral position. This provides a continuous supply of warm fluid to the actuators, located in the unheated empennage, to prevent sluggish operation of the power control assembly after periods of inactivity. A piston and orifice arrangement at one end of the main servo valve provides a hydraulic snubbing and damping action to protect the valves and the system from too rapid actuation.

Partial Emergency and Emergency Operation

The elevators can be controlled with any one of the three hydraulic systems energizing the power control assembly; however, usually two hydraulic systems are used in unison to provide uninterrupted control of the

elevators if one of the operating systems should fail. During normal operation, the Nr 1 and Nr 2 hydraulic systems are used.

If one of these systems becomes inoperable, the corresponding ELEVATOR SYS control switch on the pilots' overhead panel is placed in the EMER position. This causes the inoperable hydraulic system shutoff and bypass valve to close, the Nr 3 hydraulic system shutoff and bypass valve to open, and the Nr 3 hydraulic system pumps relay to close to start the Nr 3 system pumps. Thus the emergency actuator, powered by hydraulic system Nr 3, becomes operable to aid whichever system is still operating.

In case hydraulic system Nr 1 or Nr 2 pressure is lost to the power control assembly, place the related elevator power control switch first in the OFF and then in the EMER position. The aircraft can be safely flown as long as at least one of the elevator hydraulic power systems if functioning normally.

Elevator Artificial Feel System

The artificial feel system includes a Q spring which has an adjustable attachment point on the elevator quadrant assembly, and a motor operated Q system actuator, also mounted on the quadrant assembly. Signals from CADC Nr 1 energize the motor of the Q system actuator, sliding the point of Q spring attachment on the quadrant to increase or decrease the feel produced by the spring in accordance with increases and decreases in aircraft airspeed. Limit switches de-energize the Q system actuator motor when the Q spring reaches the minimum Q or maximum Q position.

Minimum Q and maximum Q positions represent approximately 220 KCAS and 380 KCAS respectively.

The signals from Nr 1 CADC are modified by a pitch rate adapter which obtains power from the 26 volt AC bus through a PITCH RATE ADAPT EKC circuit breaker on the emergency circuit breaker panel.

A signal comparator, which receives signals from a potentiometer in the Q system actuator and signals from CADC Nr 2, compares the actual versus the desired operation of the Q system actuator. If discrepancy exists, the comparator de-energizes the actuator, causing the Q spring to be held in the position it was in at the time the discrepancy was detected. A light on the annunciator panel illuminates when the Q system has been deactivated by the signal comparator. A switch on the pilots' forward overhead panel moves the feel spring to the MID-Q position, if desired, when the light illuminates.

Elevator Artificial Feel Selector Switch

A three-position NORM - MID-Q - RESET lever-lock type elevator artificial feel selector switch, located on the pilots' forward overhead panel, can be used to obtain the intermediate Q feel value of the artificial feel spring in the event of Q system malfunction. Placing the switch to MID-Q results in the quadrant attachment point of the Q spring being driven to the MID-Q position and stopped there. MID-Q position is approximately 304 KCAS. The NORM position allows the motor of the Q system actuator to be controlled by signals from the CADC in accordance with the changes in aircraft airspeed. The RESET position is effective only when the aircraft is on the ground.

CAUTION

Placing the Elevator Artificial Feel switch to MID Q will cause the pilot to experience higher than normal stick forces at low airspeeds, and lower than normal stick forces at high airspeeds which results in some degradation in longitudinal stability at speeds above 304 KCAS. With the MTC inoperative, further degradation of stability will occur at Mach numbers in excess of Mach 0.80.

WARNING

When operating with the Q Feel System inoperative and Mid Q position selected, do not exceed 350 KCAS.

Elevator Feel Malfunction Light

An ELEV FEEL MALFUNC light on the annunciator panel indicates a malfunctioned artificial feel system. Illumination of the light indicates that a discrepancy between CADC input and follow up signals has de-energized the Q system actuator and the Q spring is being held in the last position required by the CADC prior to system malfunction. The light is controlled by a signal comparator incorporated in the system.

Wind Gust Limitations

The aircraft was designed to withstand 70 knot gusts from any direction, the tail-on gust being the most severe. Above 70 knots, control damage may occur if the aircraft is not headed into the wind since design limits can be exceeded.

The aircraft should be evacuated to a safe weather area if winds in excess of 70 knots are expected; however, if that is impossible, the aircraft will be moored in accordance with T.O. 1C-141A-2-2. If the aircraft has been subjected to wind velocities exceeding 70 knots, thoroughly check the control surfaces and points of attachment before the next flight.

The use of engines to maneuver the aircraft during high wind is not recommended and should be avoided except under extreme circumstances. Foreign object damage (FOD) to the engines is highly probable.

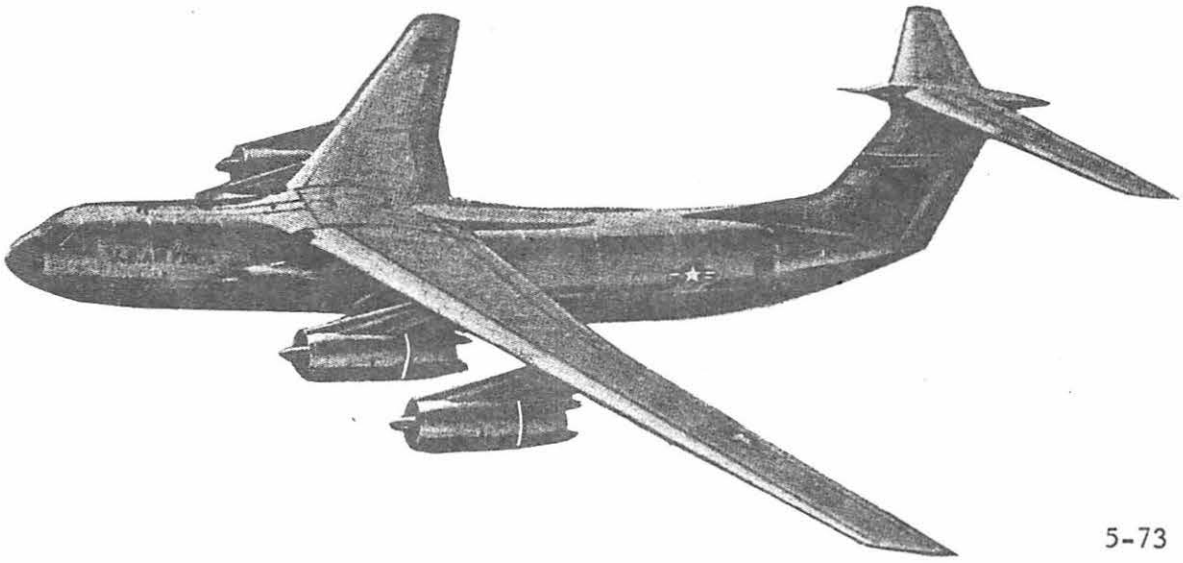

Chapter 10

STALL PREVENTION SYSTEMS

Introduction

Dual stall prevention systems are provided. Each system is independent of the other except for the interconnect of the pushers (discussed later), and comprises a control panel, an electrically heated angle of attack sensing vane, a computer channel, an overhead panel switch, a control column shaker, and a control column pusher.

The systems are identified as Nr 1 (Pilot's) and Nr 2 (Copilot's). Separate electrical and hydraulic power sources and emergency shutoff switches are provided for each system.

During an approaching stall condition, the column shakers are energized first. This imparts vibration to the control columns, sufficiently violent as to be immediately identifiable by the pilots. At the same time, the hydraulic column pusher actuators are armed by the opening of hydraulic selector valves, power is removed from the pitch trim nose-up mode, the stall prevention computer channels are armed for transmission of a control column pusher output signal, and the Nr 3 hydraulic system is automatically energized. If the pilots do not then initiate corrective action, the control column pushers are actuated when the computer channels receive the appropriate signal inputs.

Operation

The stall computer receives input signals from the angle-of-attack vanes, the yaw rate gyros, the CADCs, flap and gear position. The stall computer has two alarm schedules predicated on the position of the flaps and gear.

In the dirty configuration (gear down and flaps extended beyond 60% plus or minus 8%) shaker onset is initiated as a function of angle-of-attack, while pusher actuation is initiated as a function of angle-of-attack, yaw rate and angle-of-attack rate.

In the clean configuration (gear up or flaps NOT extended beyond 60% plus or minus 8%) Mach number is also introduced into the stall warning schedule.

Also in the clean configuration there is a 5 second timer (initiated by the shaker signal) which activates the pusher in the event angle of attack changes beyond shaker have not been great enough to signal the computer to activate the pusher.

The pusher actuation signal does not occur unless the shaker has already been energized. If both shakers are operating, both pushers are actuated by either stall channel of the computer or by their respective stall computer channel if they occur at the same time. The shakers and pushers continue to operate until the aircraft has responded and the angle of attack has been reduced below the level at which the shakers were actuated. When this point is reached, the copilot's shaker and pusher functions are immediately removed.

Approximately 3 seconds later, in the clean configuration only, the pilot's shaker and pusher functions are removed. This time delay is incorporated so that the nose of the aircraft is pushed down sufficiently if a high-attitude power-on stall is encountered. In the landing configuration, this time delay is not present.

Angle of attack rate and yaw rate modify the angle of attack at which pusher operation commences; a higher rate of change in angle of attack and/or yaw rate results in pusher actuation at a lower angle of attack.

The systems are automatically deactivated on the ground by touchdown relays.

Computer

The stall prevention computer, on the underdeck avionics equipment rack, contains two completely independent channels. The Nr 1 (Pilot's) channel receives inputs from the left angle of attack vane transducer, the left outboard flap position switch, nose gear position switch, the Nr 1 CADC, and from a yaw rate gyro.

The Nr 2 (Copilot's) channel similarly receives inputs from the right angle of attack vane transducer, the right outboard flap position switch, nose gear position switch, the Nr 2 CADC, and from a yaw rate gyro.

Angle of Attack Vanes

An angle of attack vane is mounted on each side of the forward fuselage. The left vane provides angle of attack signals for the Nr 1 stall prevention system, and the right vane performs the same function for the Nr 2 system. The vanes are electrically heated for protection from icing.

The vanes are positioned by airflow over them during flight. Vane movement rotates a shaft in each vane assembly to which a transducer is coupled. The transducer transmits continuous local angle of attack signals to the related channel of the stall prevention computer so long as the applicable system is energized.

Hydraulic Action

When either computer channel sends a stall signal to its system, the shaker motor operates. At the same time, an arming valve opens to deliver pressure to a second valve on the pusher actuator. Stall prevention Nr 1 pressure is supplied by hydraulic system Nr 3, and stall prevention Nr 2 pressure by hydraulic system Nr 2.

The pusher actuator valve does not open unless the angle of attack reaches the pusher level, at which time hydraulic pressure applies forward force to the control column, if the elevator is between 22.7 degrees up and approximately 5.3 degrees down.

This forward force varies with elevator position, increasing with upward elevator deflection and decreasing with downward deflection. Force exerted varies between 90-135 pounds with both pushers operating. Force applied decreases approximately one-half when one pusher is inoperative.

When the stall condition is corrected, the valves close, pressure is ported to return, and the actuators returned to neutral by internal springs.

Elevator action is now possible throughout the full range.

Stall Prevention Panels

Both the pilot (Nr 1) and copilot (Nr 2) have a Stall Prevention Panel on their side console. Each panel controls, tests and provides visual stall warning for its system.

The pusher switch is placed in NORMAL for complete pusher and shaker operation. This switch does not affect shaker or STALL light operation. The OFF position turns off the pusher

and illuminates the corresponding PLT PUSHER OFF or CO-PLT PUSHER OFF light on the annunciator panel.

The TEST position of the second switch used with the aircraft on the ground causes the touchdown relays to place that system in the airborne condition. Shaker and pusher operation now can be tested by positioning of the proper angle of attack vane. The MACH TEST allows testing for correct Mach number operation by the test switches on the CADC test panel.

NOTE: Do not place the stall prevention test switch to the MACH TEST position while in flight. This will cause shaker operation if the aircraft is flying at Mach 0.365 or greater and pusher operation if at Mach 0.565 or greater.

STALL PREVENTION CONTROL PANELS
PILOT'S AND COPILOT'S SIDE CONSOLES

The STALL warning light illuminates when its system has sensed an approaching stall condition and the computer has transmitted the stall signal to the shaker circuit. The light remains illuminated until the stall condition has been corrected and shaker operation has ceased. The light is included in the instrument light dimming circuit.

Stall Prevention System Panel

This panel is on the pilots' overhead panel with a switch for the Nr 1 (pilot's) system and the Nr 2 (copilot's) system.

The NORM position of either switch provides stall warning by shaker operation. You will also have pusher operation if the pusher switch on the stall prevention panel is not in OFF.

The OFF position turns off the system. It is used as an emergency shutoff or if a malfunction is suspected. Turning one switch OFF does not affect the other system.

STALL PREVENTION SYS PANEL
PILOTS' OVERHEAD PANEL

System and Pusher Warning Lights

These lights are on the annunciator panel. The STALL PREV 1 or STALL PREV 2 light illuminates if a failure occurs in its computer circuit or vane heater circuit or if the system switch on the overhead panel is in OFF. The PLT PUSHER OFF or CO-PLT PUSHER OFF light illuminates anytime the pusher switch for its system is in OFF.

AILERON SYS 1 PWR	AILERON SYS 2 PWR	PLT PUSHER OFF	ENG 1 FUEL PRESS	ENG 2 FUEL PRESS	ENG 3 FUEL PRESS	ENG 4 FUEL PRESS	DOOR OPEN	PITOT HEAT	CO-PLT PUSHER OFF
ELEV FEEL MALFUNC	ELEV EMER PWR	YAW DAMPER FAULT	FIRE BOTTLE 1	FIRE BOTTLE 2	FIRE BOTTLE 3	FIRE BOTTLE 4	MACH TRIM INOP	WG ANTI-ICE OVHT	RAIN REMOVAL OVHT
ELEV SYS 1 PWR	ELEV SYS 2 PWR	UNDR SPLR SPEED	SPARE	CADC 1 INOP	CADC 2 INOP	SPARE	FLT REC INOP	OXY QUANTITY LOW	ICING
RUDDER SYS 1 PWR	RUDDER SYS 2 PWR	RUDDER OVERPRESS	SPARE	L AIL. TAB OPER	R AIL. TAB OPER	STALL PREV 1	CABIN PRESS LOW	SPARE	CARGO SMOKE
FLAP ASYM DET	FLAP ASYM	L BLEED DUCT OVHT	2 SPOILER INOP	3 SPOILER INOP	SPARE	STALL PREV 2	R BLEED DUCT OVHT	APU FIRE	SPARE

ANNUNCIATOR PANEL

C-141
COMMUNICATIONS
NAVIGATION

Section 6

TABLE OF CONTENTS

Chapter 1

GENERAL

COMM/NAV Equipment

The COMM/NAV equipment of the C-141 aircraft consists of communications systems, radio navigation system, radar navigation systems, special navigation systems, and emergency communications systems.

These systems are listed on the following pages.

Communications Systems

	NOMENCLATURE	COMMON IDENTIFICATION	USE
1.	AN/AIC-18	Interphone	Crew Intercommunications
2.	AN/AIC-13	Public Address	One-way Communication to Cargo Area
3.	HF-102	HF Command	Long Range Communications
4.	807A (Wilcox)	VHF Command	Line of Sight Communications
5.	AN/ARC-90	UHF Command	Line of Sight Communications

Radio Navigation Systems

	NOMENCLATURE	COMMON IDENTIFICATION	USE
1.	ADF-73	Radio Compass	LF/MF Reception and Homing
2.	806A	OMNI	VHF Bearing/Localizer Approach
3.	800B	Glide Slope	Glide Slope Reception
4.	51Z-3	Marker Beacon	Marker Beacon Reception
5.	AN/ARN-21C	TACAN	TACAN Bearing/Distance

Radar Navigation Systems

	NOMENCLATURE	COMMON IDENTIFICATION	USE
1.	AN/APN-147V	Doppler Radar	Provides Groundspeed and Drift
2.		Low Alt. Radar Altimeter	Absolute Altimeter
3.	AN/APX-64	IFF	Identification
4.	AN/APN-59B.	Radar	Navigation and Search Radar

Special Navigation Systems

	NOMENCLATURE	COMMON IDENTIFICATION	USE
1.	AN/ASN-35	Doppler Computer	Computed Distance and Track
2.	AN/ASN-24	Navigation Computer	Computed Position

Emergency Communications System

	NOMENCLATURE	COMMON IDENTIFICATION	USE
1.	CPI	Crash Position Indicator	Emergency Transmission

COMM/NAV Equipment Location

The majority of the components for the COMM/NAV systems are located either on the center avionics equipment rack or on the left hand avionics equipment rack. The exceptions are listed below:

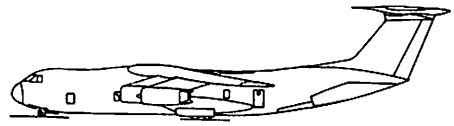

COMPONENTS	LOCATION
1. Low Altitude Radar Altimeter Receiver/Transmitter	Cargo Compartment (under main wing beam)
2. HF-102 Antenna Couplers and Lightning Arrestor Unit	Horizontal Stabilizer
3. APN-59B Receiver/Transmitter Unit	Aft of Radome

COMM/NAV Systems Remote Controls

All of the COMM/NAV remote controls are located on either the center console, pilot's or copilot's side consoles, or on the navigator's control panel. The only exception is that the control for the public address is located at the engineer's station.

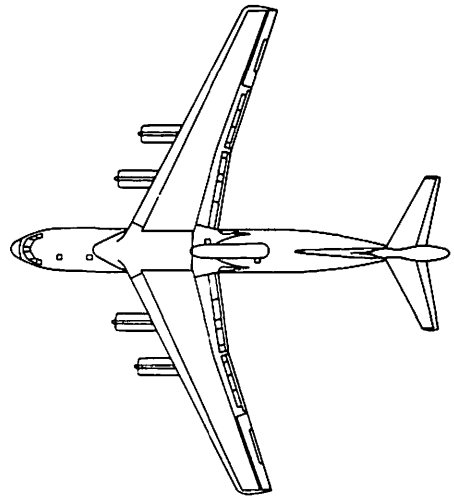

COMM/NAV Power Sources

The following systems will be available for operation whenever normal Avionic Bus Power failure occurs:

1. From the Emergency Buses

   a. IFF Systems
   b. Pilot's and flight engineer's interphone circuits.

2. From the Isolated Avionics Buses

   a. Nr 1 VHF Command System
   b. Nr 1 UHF Command System
   c. Nr 1 VHF-NAV Receiver
   d. Nr 1 Glide Slope Receiver

It is now possible to stipulate that:

1. All remaining Nr 1 systems receive their operating power from the Nr 1 Avionics Buses.

2. All Nr 2 systems receive their operating power from the Nr 2 Avionics Buses.

COMM/NAV Protective Devices

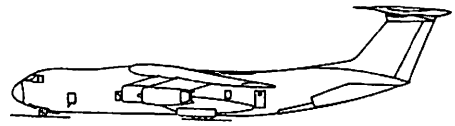

Most of the protective devices for the COMM/NAV systems are located either on the avionic circuit breaker or emergency circuit breaker panel. The exceptions are listed below:

	SYSTEM	PROTECTIVE DEVICE LOCATION
1.	AN/APN-59B Search Radar System	Receiver-Transmitter RT-289B Power Supply PP-1073A Marker Generator SG-461
2.	Doppler System	Frequency Tracker CV-1181/APN-147V Doppler Computer CP622/ASN-35
3.	Navigational Computer	Converter Chassis Power Supply PP-3214/ASN-24
4.	AN/APX-64 SIF	Receiver-Transmitter RT-642
5.	AN/ARC-90 UHF Command System	Receiver-Transmitter RT-641

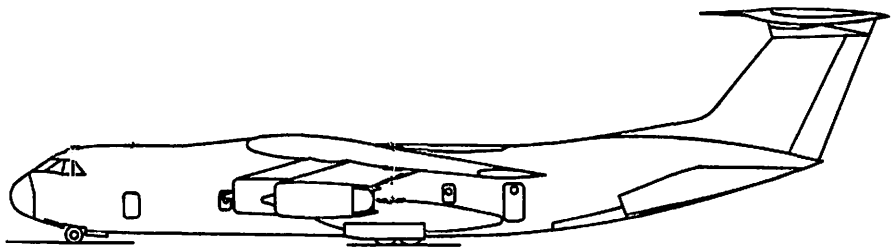

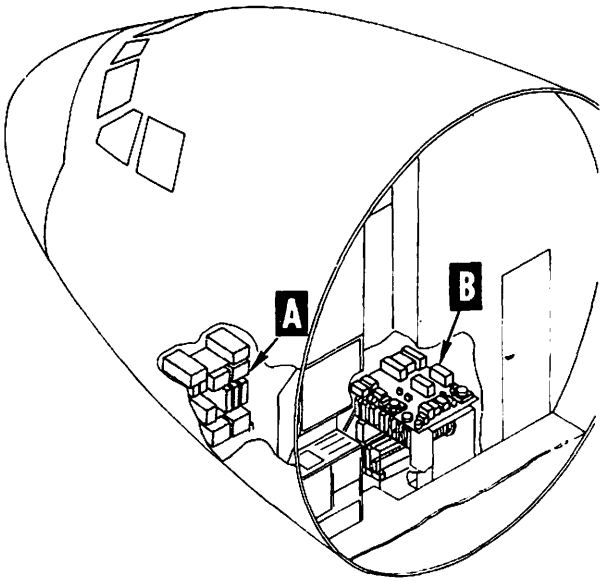

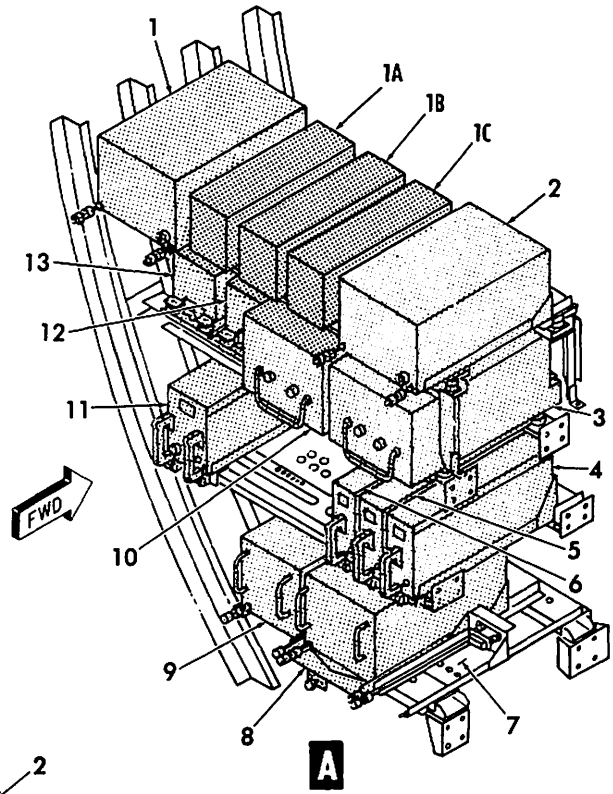

LEFT HAND
AVIONICS EQUIPMENT RACK

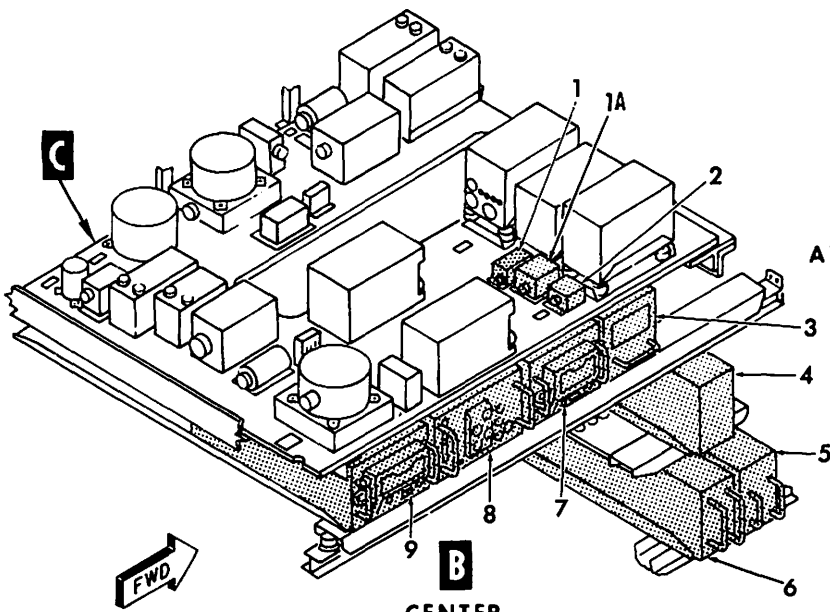

CENTER
AVIONICS EQUIPMENT RACK

B

1. SINGLE AXIS RATE SENSOR
1A. TWO AXIS RATE SENSOR (AFCS)
1. TWO AXIS RATE SENSOR (AFCS)
2. ARTIFICAL FEEL COMPARATOR
3. FREQUENCY TRACKER (TYPE CV-1181/APN-147V)
4. FLIGHT RECORDER (TYPE FA-542)
5. NO. 2 CADC (TYPE CPU-43/A)
6. POWER SUPPLY (TYPE PP-3256/APN-151) [1]
   POWER SUPPLY (TYPE PP-3866/APN-157) [2]
7. NO. 1 HF-102 TRANSCEIVER (TYPE 618T-2)
8. IFF RCVR-XMTR (TYPE RT642/APX-46(V))
9. NO. 2 HF-102 TRANSCEIVER (TYPE 618T-2)

A

1. NO. 1 UHF TRANSCEIVER (TYPE RT641/ARC-90)
1A. CADC NO. 1 ARTIFICIAL FEEL SERVO REPEATER [3]
1B. CADC NO. 2 ARTIFICIAL FEEL SERVO REPEATER [3]
1C. CADC NO. 1 MACH TRIM COMPENSATOR SERVO REPEATER [3]
2. NO. 2 UHF TRANSCEIVER (TYPE RT641/ARC-90)
3. NO. 2 TACAN RCVR-XMTR (TYPE RT220C/ARN-21)
4. AILERON COMPUTER (AFCS)
5. YAW DAMPER COMPUTER (AFCS)
6. ELEVATOR COMPUTER (AFCS)
7. MOUNT, AMPLIFIER, AN/APN-150 ALTIMETER [7]
8. CONVERTER (TYPE PP-3214/ASN-24) [8]
9. COMPUTER (TYPE CP-641/ASN-24) [8]
10. NO. 1 TACAN RCVR-XMTR (TYPE RT220C/ARN-21)
11. NO. 1 CADC (TYPE CPU-43/A)
12. NO. 2 TACAN COUPLER (NO. 9616-13)
13. NO. 1 TACAN COUPLER (NO. 9616-13)

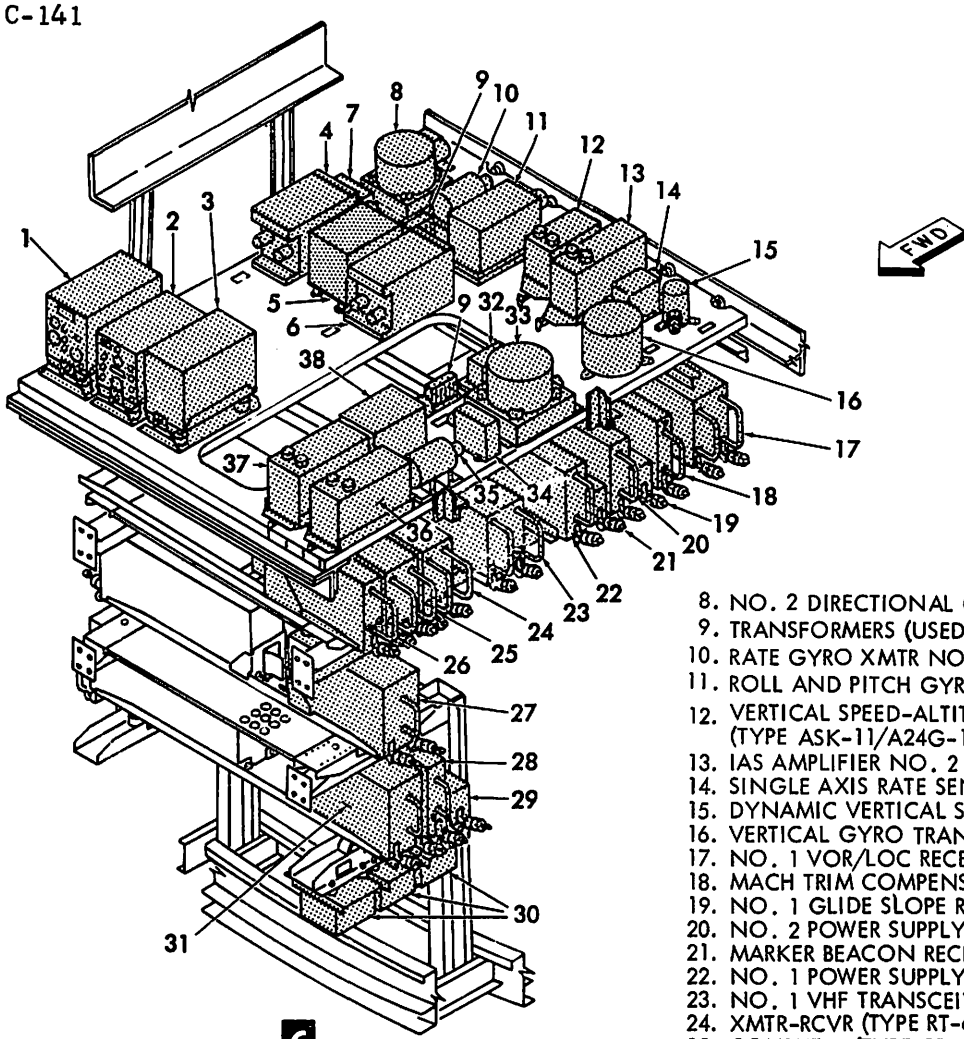

C

CENTER AVIONICS EQUIPMENT RACK

1. POWER SUPPLY (TYPE PP1073A/APN-59)
2. SYNCHRONIZER (TYPE SN-198/APN-59)
3. POWER SUPPLY (TYPE PP1073A/APN-59)
4. FLIGHT DIRECTOR COMPUTER NO. 1 (TYPE CPU-27A) 5
   FLIGHT DIRECTOR COMPUTER NO. 1 (TYPE CPU-65A) 6
5. POSITION MARK GENERATOR (TYPE SG-461/APN-59B) 4
6. FLIGHT DIRECTOR COMPUTER NO. 2 (TYPE CPU-27A) 5
   FLIGHT DIRECTOR COMPUTER NO. 2 (TYPE CPU-65A) 6
7. RATE SWITCHING GYRO NO. 2 (TYPE MC-1)
8. NO. 2 DIRECTIONAL GYRO (C-12)
9. TRANSFORMERS (USED WITH TYPE MD-1 GYRO)
10. RATE GYRO XMTR NO. 2 (TYPE TRU-2A/A)
11. ROLL AND PITCH GYRO NO. 2 (TYPE MD-1)
12. VERTICAL SPEED-ALTITUDE AMPLIFIER NO. 2 (TYPE ASK-11/A24G-11)
13. IAS AMPLIFIER NO. 2 (TYPE ASK-10/A24G-10)
14. SINGLE AXIS RATE SENSOR NO. 2 (AFCS)
15. DYNAMIC VERTICAL SENSOR (AFCS)
16. VERTICAL GYRO TRANSMITTER (AFCS)
17. NO. 1 VOR/LOC RECEIVER (TYPE 806A)
18. MACH TRIM COMPENSATOR
19. NO. 1 GLIDE SLOPE RECEIVER (TYPE 800B)
20. NO. 2 POWER SUPPLY-AMPLIFIER (C-12)
21. MARKER BEACON RECEIVER (TYPE 51Z-3)
22. NO. 1 POWER SUPPLY-AMPLIFIER (C-12)
23. NO. 1 VHF TRANSCEIVER (TYPE 618M-1)
24. XMTR-RCVR (TYPE RT-625(P)/APN-147(V))
25. COMPUTER (TYPE CP-622/ASN-35)
26. NO. 1 ADF RECEIVER (TYPE DFA-73A)
27. NO. 2 VHF TRANSCEIVER (TYPE 618M-1)
28. NO. 2 ADF RECEIVER (TYPE DFA-73A)
29. NO. 2 GLIDESLOPE RECEIVER (TYPE 800B)
30. AUDIO FREQUENCY AMPLIFIERS (TYPE AM944/AIC-13)
31. NO. 2 VOR/LOC RECEIVER (TYPE 806A)
32. SINGLE AXIS RATE SENSOR NO. 1 (AFCS)
33. NO. 1 DIRECTIONAL GYRO (C-12)
34. RATE SWITCHING GYRO NO. 1 (TYPE MC-1)
35. RATE GYRO XMTR NO. 1 (TYPE TRU-2A/A)
36. IAS AMPLIFIER NO. 1 (TYPE ASK10/A24G-10)
37. VERTICAL SPEED-ALTITUDE AMPLIFIER NO. 1 (TYPE ASK-11/A24G-11)
38. ROLL AND PITCH GYRO NO. 1 (TYPE MD-1)

1 AIRCRAFT AF61-2775 THROUGH AF61-2777 AND AF63-8075 THROUGH AF63-8077

2 AIRCRAFT AF61-2778, AF61-2779, AND AF63-8078 AND UP.

3 AIRCRAFT AF63-8076 AND AF63-8077 ONLY.

4 AIRCRAFT AF61-2778 THROUGH AF63-8075, AND AF63-8081 AND UP.

5 AIRCRAFT AF61-2775 THROUGH AF63-8088 IF NOT MODIFIED BY T.O. 1C-141A-562.

6 AIRCRAFT AF63-8089 AND UP; AND AIRCRAFT AF61-2775 THROUGH AF63-8088 WHEN MODIFIED BY T.O. 1C-141A-562.

7 AIRCRAFT AF61-2775 THROUGH AF64-646 IF NOT MODIFIED BY ECP 272.

8 AIRCRAFT AF61-2778 THROUGH AF63-8077, AND AF63-8088 AND UP.

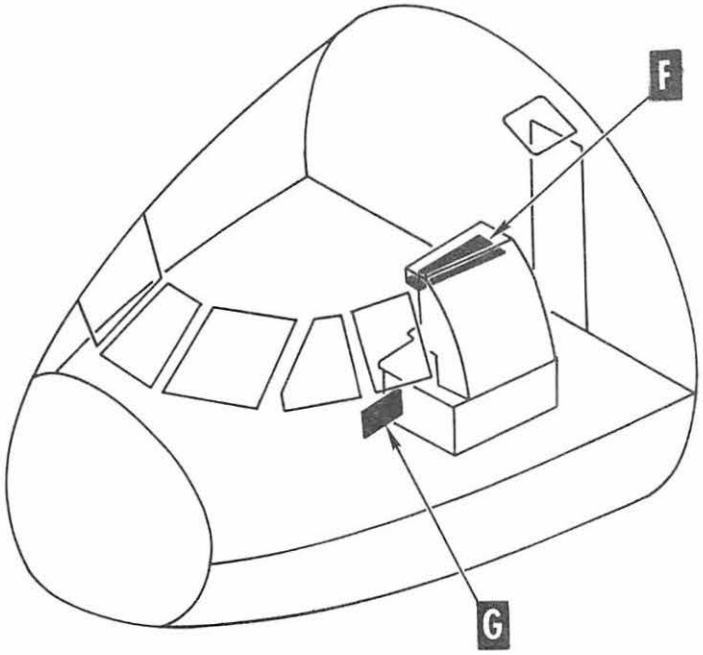

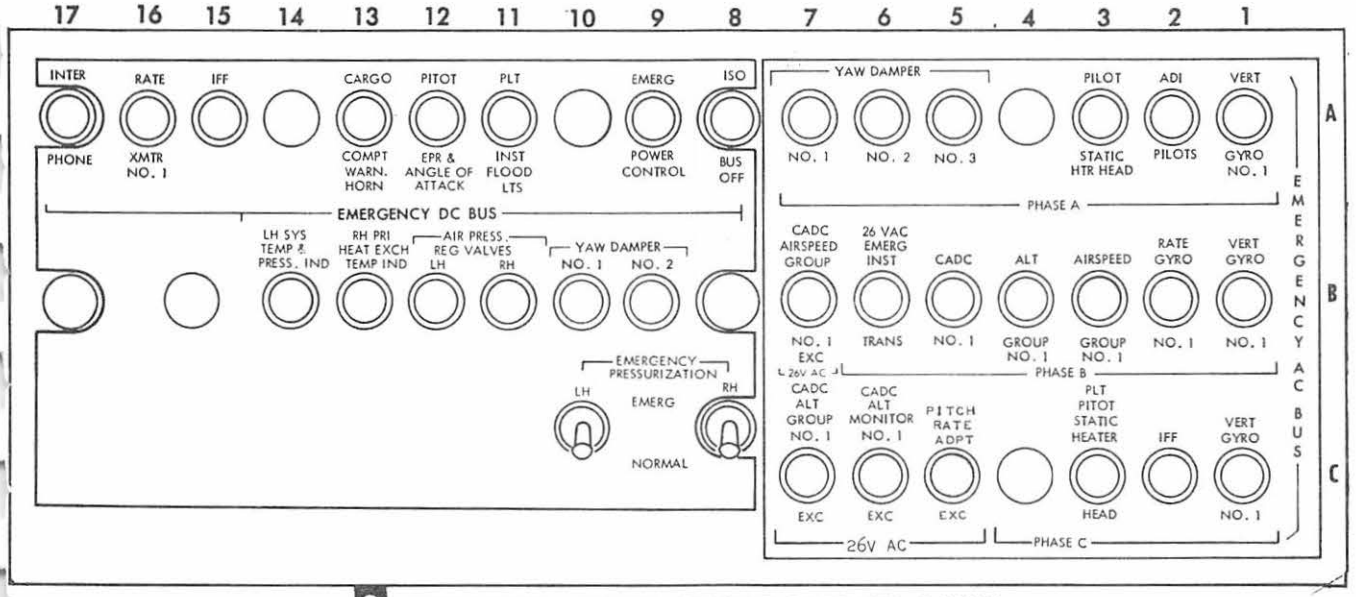

G EMERGENCY POWER CIRCUIT BREAKER PANEL

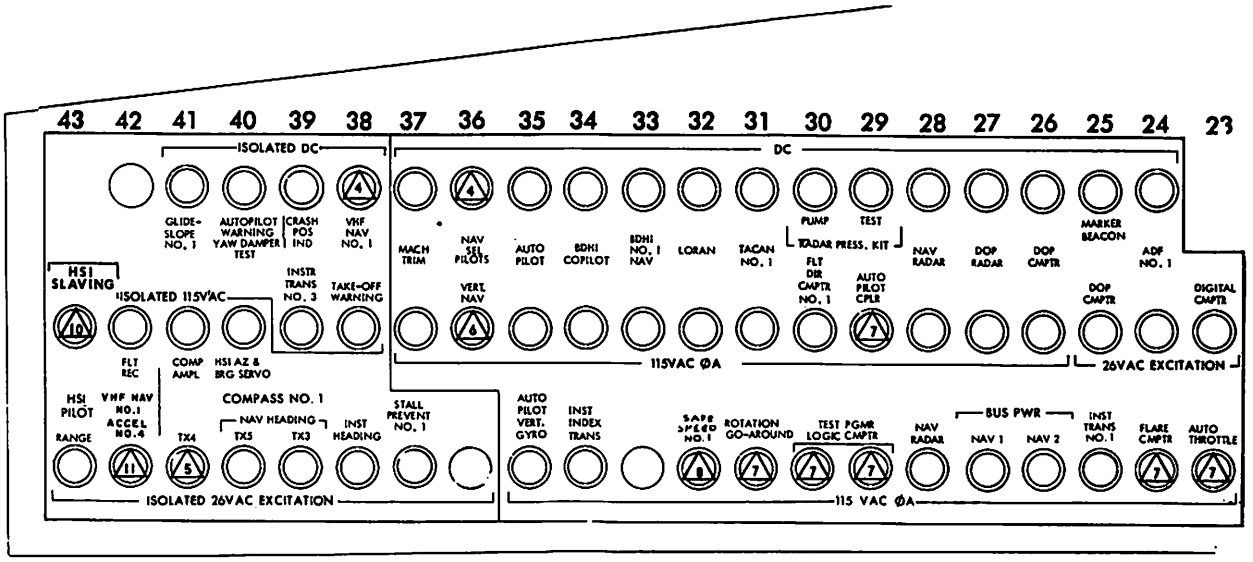

(AFT HALF OF PANEL)

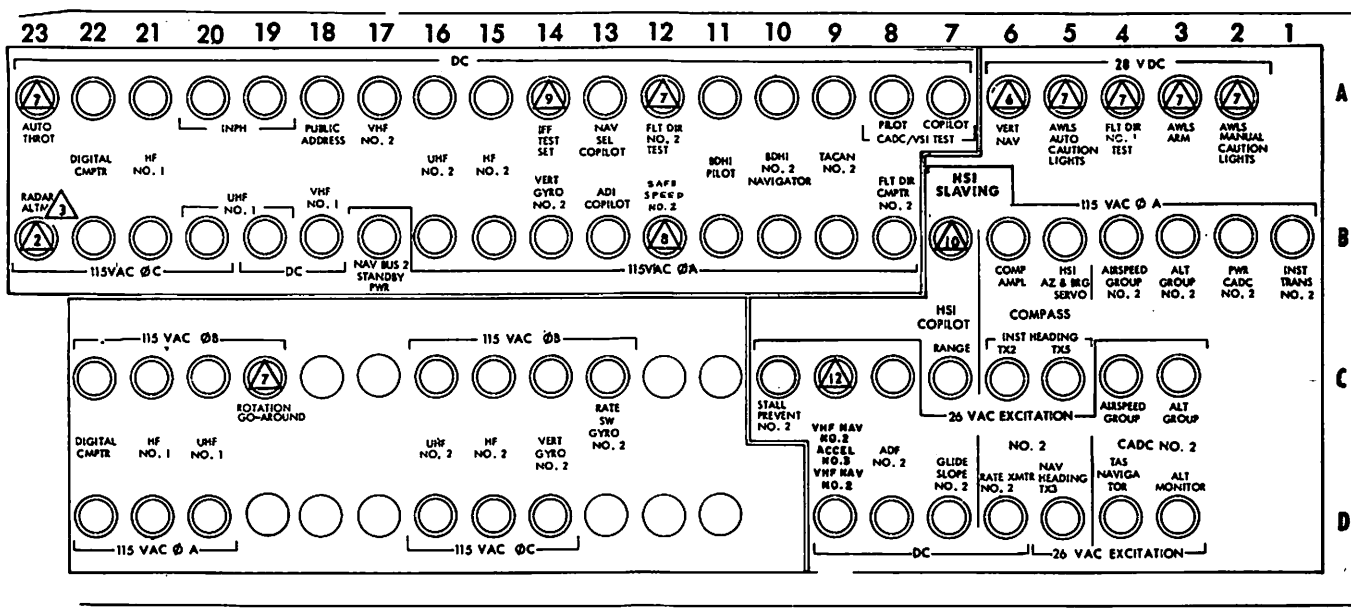

(FWD HALF OF PANEL)

F AVIONICS CIRCUIT BREAKER PANEL

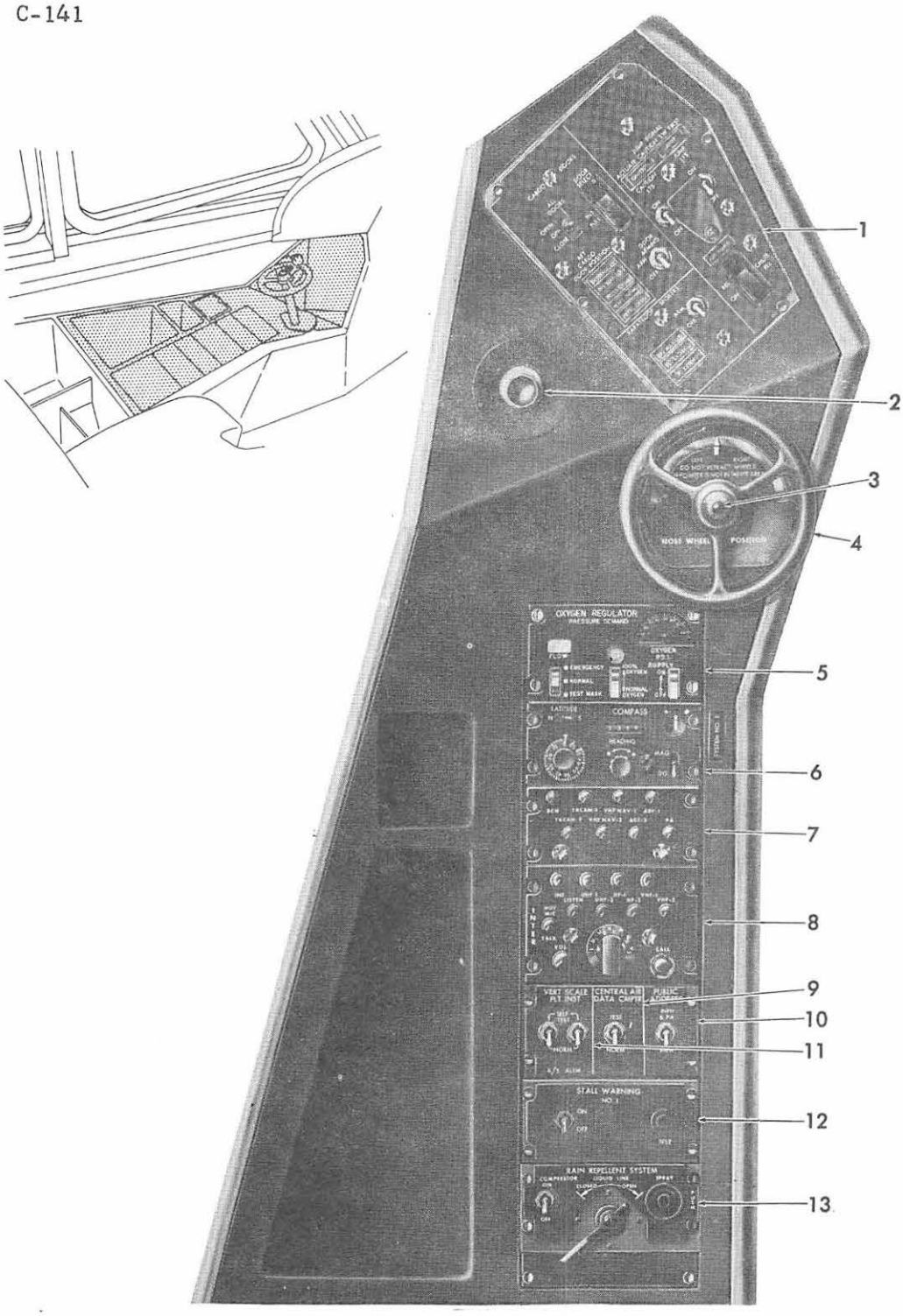

1. PARADROP AND ADS CONTROL PANEL
2. GASPER OUTLER
3. INTERPHONE BUTTOI '
4. NOSE GEAR STEERING WHEEL
5. OXYGEN REGULATOR
6. C-12 COMPASS SYSTEM DIGITAL CONTROLLER
7. INTERPHONE MONITOR PANEL
8. INTERPHONE CONTROL PANEL
9. CENTRAL AIR DATA COMPUTER TEST SWITCH
10. PUBLIC ADDRESS SWITCH
11. VERTICAL SCALE FLIGHT INSTRUMENTS TEST PANEL
12. STALL WARNING CONTROL PANEL
13. RAIN REPELLENT CONTROL PANEL

Pilot's Side Console

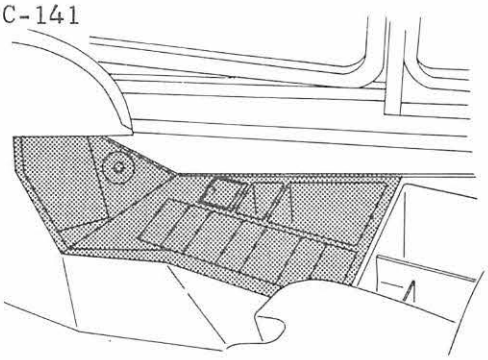

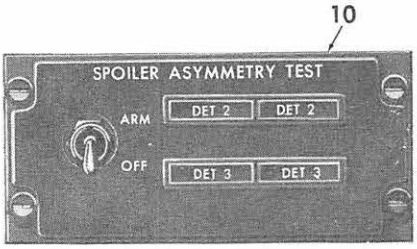

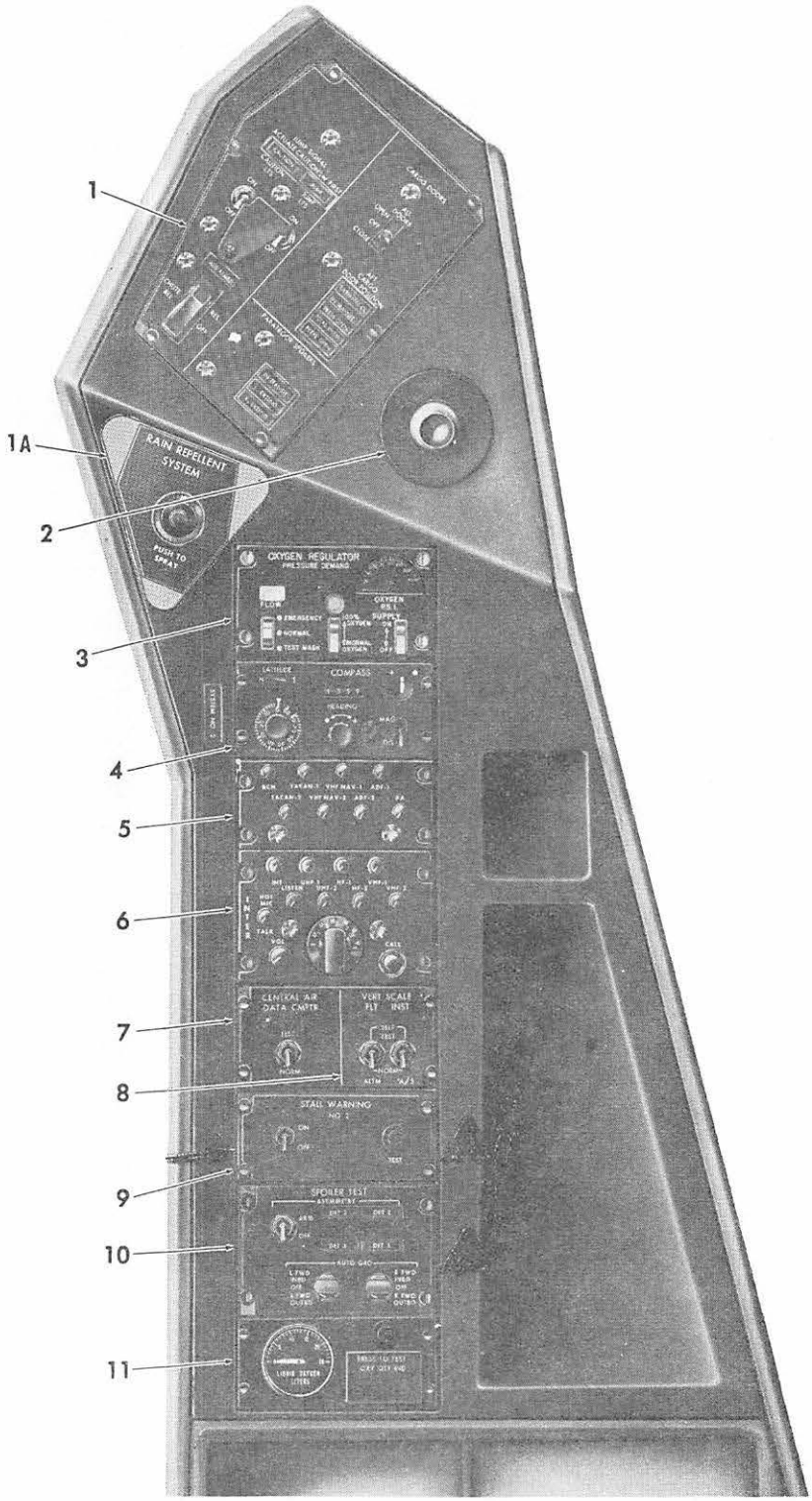

1. PARADROP AND ADS CONTROL PANEL
1A. RAIN REPELLENT PANEL
2. GASPER OUTLET
3. OXYGEN REGULATOR
4. C-12 COMPASS SYSTEM DIGITAL CONTROLLER
5. INTERPHONE MONITOR PANEL
6. INTERPHONE CONTROL PANEL
7. CENTRAL AIR DATA COMPUTER TEST SWITCH
8. VERTICAL SCALE FLIGHT INSTRUMENTS TEST PANEL
9. STALL WARNING CONTROL PANEL
10. SPOILER ASYMMETRY TEST PANEL
11. LIQUID OXYGEN QUANTITY INDICATOR AND QUANTITY INDICATOR TEST SWITCH

Copilot's Side Console

PILOTS' CENTER CONSOLE

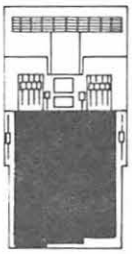

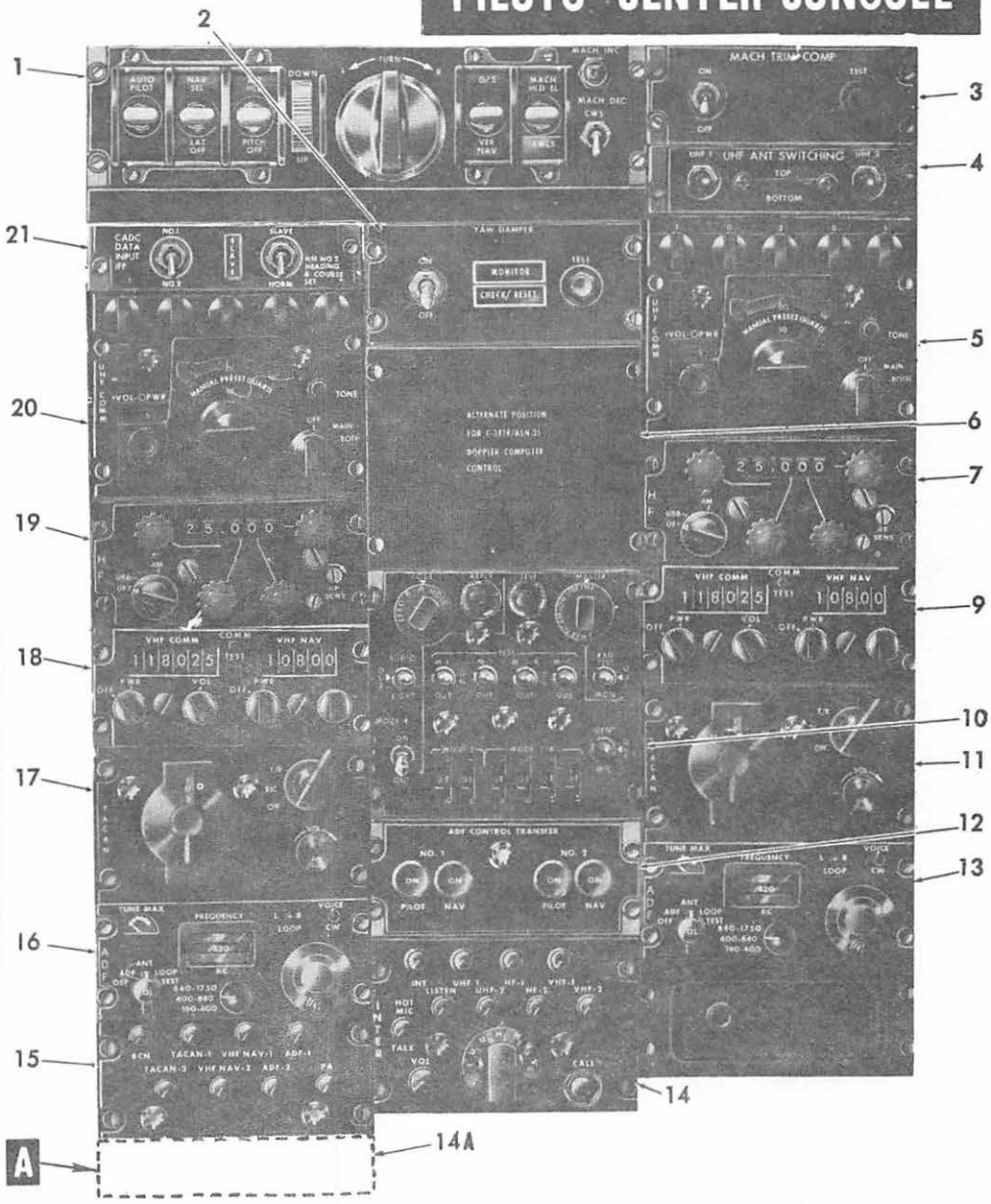

ON 50244 THROUGH 60130 AND AIRCRAFT MODIFIED BY T.O. 837 BUT NOT BY T.O. 969.

1. AFCS PANEL 1
2. YAW DAMPER PANEL
3. MACH TRIM PANEL
4. UHF ANTENNA SWITCHING PANEL
5. UHF NO. 2 PANEL
6. DOPPLER COMPUTER PANEL (ALTERNATE POSITION)
7. HF NO. 2 PANEL
8. DELETED
9. VHF NO. 2 PANEL
10. IFF PANEL
11. TACAN NO. 2 PANEL
12. ADF TRANSFER SWITCH PANEL
13. ADF NO. 2 PANEL
14. INTERPHONE PANEL

14A. CADC/IFF ALT DATA INPUT PANEL

15. INTERPHONE MONITOR PANEL
16. ADF NO. 1 PANEL
17. TACAN NO. 1 PANEL
18. VHF NO. 1 PANEL
19. HF NO. 1 PANEL
20. UHF NO. 1 PANEL
21. CADC/IFF ALT DATA INPUT AND HSI NO. 2 COURSE AND HEADING SET PANEL 2

NOTE

1 "VERNAV AND AWLS" POSITIONS ON 60131 AND UP AND AIRCRAFT BY T.O. 969.

2 ON 60131 AND UP AND AIRCRAFT MODIFIED BY T.O. 969.

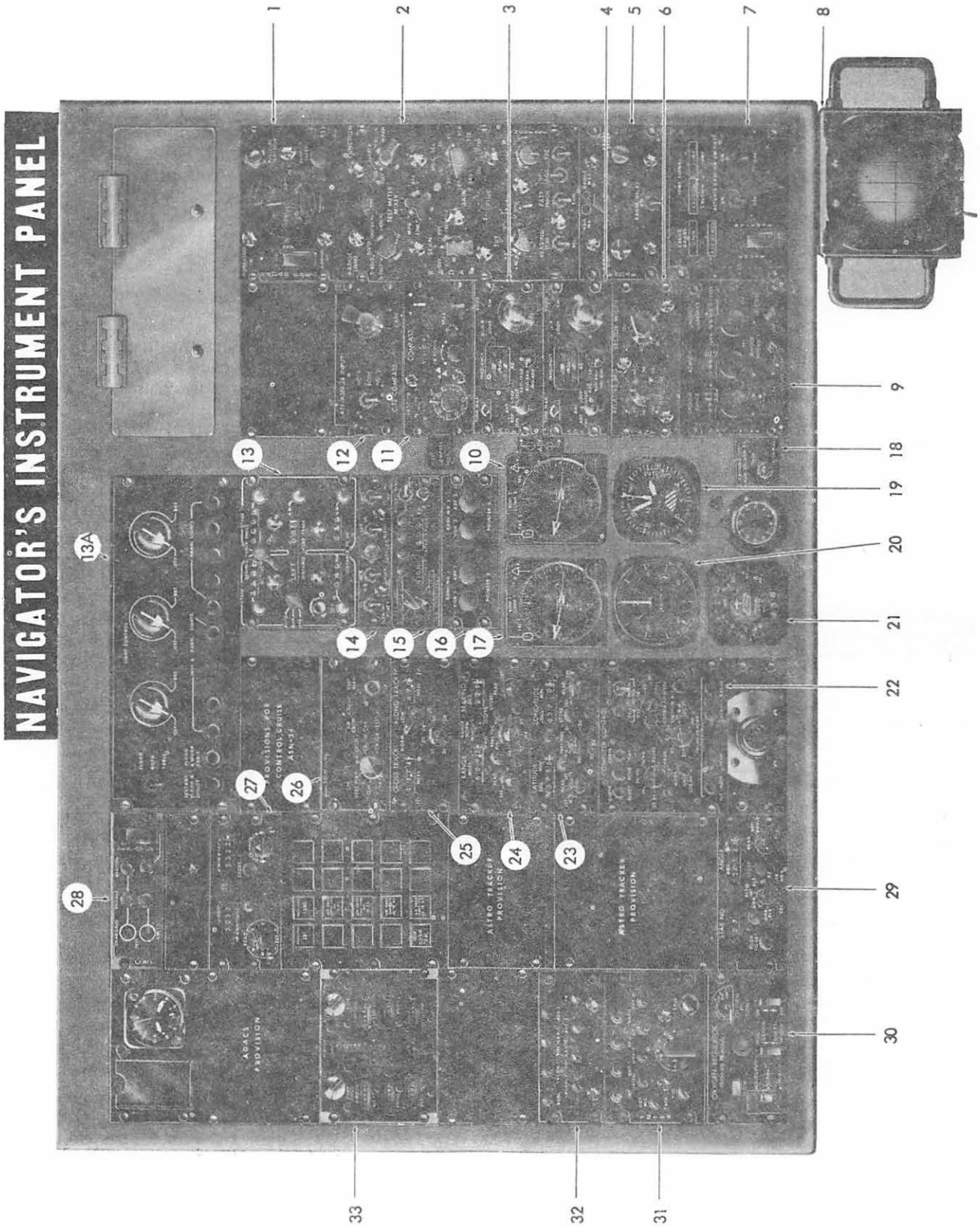
NAVIGATOR'S INSTRUMENT PANEL
1
2
3
4
5
6
7
8
9
10
11
12
13
13A
14
15
16
17
18
19
20
21
22
23
24
25
26
27
28
29
30
31
32
33

1. ASQ-70 RADAR PRESSURIZATION PANEL (C-3449)
2. APN-59B RADAR SET PANEL (C-4004)
3. ADF-1 PANEL
4. ADF-2 PANEL
5. APN-59B SYNCHRONIZER PANEL (C-4005)
6. APN-59B ANTENNA PANEL (C-4006)
7. PARADROP AND ADS PANEL
8. AZIMUTH AND RANGE INDICATOR (PPI) (APN-59B) (1P-628)
9. APN-59B GENERATOR PANEL (C-3939)
10. BDHI NO. 2 (ID-798/ARN)
11. C-12 COMPASS PANEL (1)
12. ASN-24 INPUT PANEL
13. DOPPLER COMPUTER PANEL (ASN-35)(C-3819) (2)

13A. LIGHT CONTROL PANEL

14. DOPPLER RADAR PANEL (APN-147) (C-3818)
15. AUXILIARY CROSS-TRACK PANEL (ASN-35) (C-3820)
16. BDHI SELECTOR PANEL
17. BDHI NO. 1 (1D-798/ARN)
18. ASN-24/ASN-35 GROUND TEST PANEL
19. PRESSURE ALTIMETER (ARU-7/A)
20. TRUE AIRSPEED INDICATOR (TAS) (AVU-15/A)
21. DOPPLER RADAR SYSTEM INDICATOR (APN-147) (ID-938A)
22. COMPUTER PANEL (ASN-24) (C-3961)
23. LATITUDE-LONGITUDE PANEL (ASN-24) (C-3962)
24. RANGE-BEARING PANEL (ASN-24) (C-3963)
25. CROSS TRACK-ALONG TRACK PANEL (ASN-24) (C-3964)
26. MODE CONTROL PANEL (ASN-24) (C-6213)
27. INITIAL CONDITION PANEL (ASN-24) (C-6214)
28. CRASH POSITION INDICATOR (CPI) PANEL
29. CELESTIAL DATA PANEL (ASN-24) (C-3965)
30. OXYGEN REGULATOR PANEL
31. INTERPHONE PANEL (AIC-18) (C-3942)
32. INTERPHONE MONITOR PANEL (A1C-18) (C-3943)
33. VERTICAL NAVIGATION COMPUTER PANEL (3)

NOTE

(1) ALTERNATE POSITION ON PILOT'S SIDE CONSOLE
(2) ALTERNATE POSITION ON PILOT'S CENTER CONSOLE
(3) ON 60131 AND UP AND AIRCRAFT MODIFIED BY T.O. 969.

NAVIGATOR'S INSTRUMENT PANEL EQUIPMENT GUIDE

ANTENNA LOCATIONS

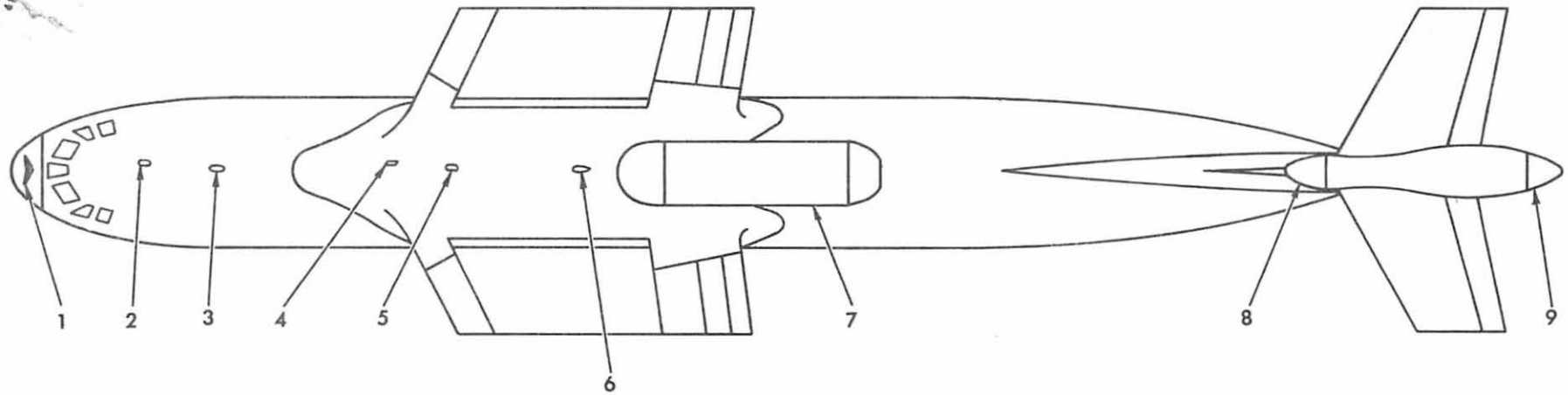

1. SEARCH RADAR
2. TACAN 1
3. UHF 1
4. UHF 2
5. TACAN 2
6. VHF 2
7. ADF 1 & 2 SENSE
8. HF 1 & 2
9. LORAN
10. VHF NAV

11. TACAN 1
12. MARKER BEACON
13. RADAR ALTIMETER
14. UHF 1
15. VHF 1
16. TACAN 2
17. IFF
18. ADF LOOP
19. DOPPLER RADAR
20. UHF 2
21. GLIDESLOPE 1 & 2

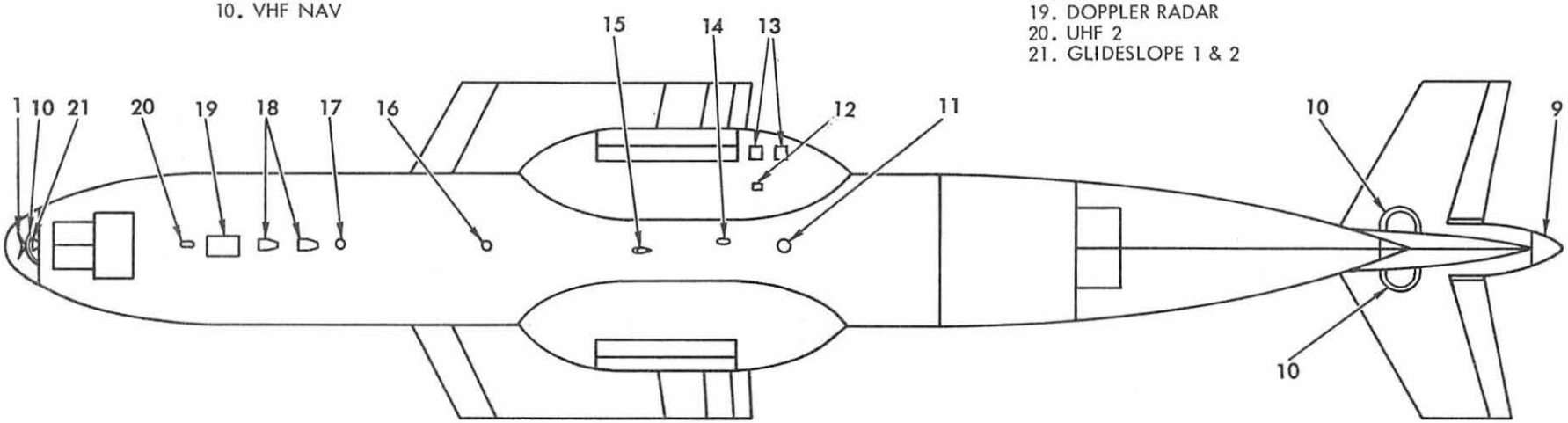

Chapter 2

INTERPHONE AND PUBLIC ADDRESS SYSTEM

AN/AIC-18 Interphone System

The AN/AIC-18 Interphone system provides voice communications between the flight stations, cargo compartment and ground crew personnel. It also provides switching and mixing facilities for transmitting and receiving over the communications systems, and receiving the navigation systems.

The DC voltage for the interphone system consists of three independently operated circuits. Operational power for each circuit is provided through 28 volt DC circuit breakers. On the diagram below, dotted lines connect the positions of the pilot's circuit, which is powered from the emergency DC bus. Solid lines connect the positions on the copilot's circuit. Power for this circuit is from the main avionics bus Nr 2. Dashed lines connect the positions on the flight observer's circuit, which is powered by the main avionics bus Nr 1.

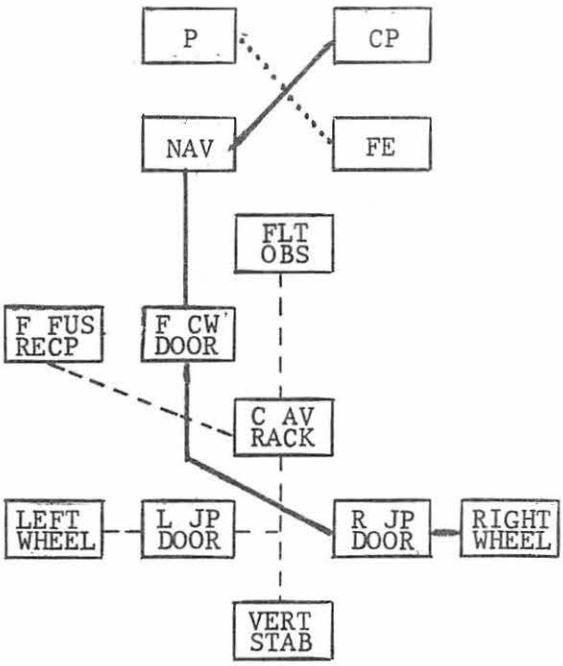

Interphone control and monitor panels are installed at the pilot's, copilot's, navigator's, and flight observer's crew positions. The flight engineer's position has only the C-3942 (P) control panel installed. The Center Avionic Equipment Rack contains both panels.

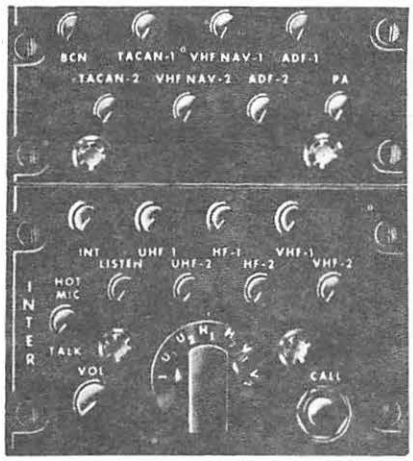

C-3943 (P) MONITOR PANEL
C-3942 (P) CONTROL PANEL

The control panel consists of a mike selector, 8 push-pull audio switches, a HOT MIC TALK switch, a master volume control, and a CALL button. The monitor panel provides 8 additional audio switches to increase the receiving capability of the control panel.

The mike selector has seven positions and allows the operator to transmit and receive the following facilities:

- I - Interphone and public address transmission
- U1 - UHF Command Radio No. 1
- U2 - UHF Command Radio No. 2
- H1 - HF Liaison Radio No. 1
- H2 - HF Liaison Radio No. 2
- V1 - VHF Command Radio No. 1
- V2 - VHF Command Radio No. 2

NOTE: Only the interphone and public address positions are wired for operation at the forward crew door and the two jumpmaster/loadmaster control panels. Only the interphone position is wired for operation at the flight engineer's panel.

There is a MIC-OFF-INTERPHONE switch on the control yoke. When the switch is held in the up position (INTERPHONE), transmissions will be made only on interphone, regardless of the position of the MIC selector on the interphone control panel. In the down (MIC) position, the user is able to transmit over whatever facility he has selected on the MIC selector on the interphone control panel. In the spring loaded middle position, the mic is inoperative.

There is also an interphone button on the nose steering wheel that enables the pilot to transmit over interphone while steering the aircraft.

The 16 push-pull, rotary, audio switches enables the user to select any combination of audio facilities and individual volume control. The push-pull feature connects and disconnects the individual audio facilities while the rotary feature affords the individual volume control.

The master volume control determines the output of an audio amplifier within the control panel through which all signals are routed for final amplification; thus the volume of all signals is controlled simultaneously. This does not mean that all signals will be heard equally well, as most signals arriving at the amplifier have passed through two other volume controls. Therefore, the strength of each signal will be different. The audio amplifier will amplify each signal the same ratio, but it will not amplify a weak signal to the level of a strong signal.

The CALL feature is used to alert all crew members and to assure that they receive the information broadcast on the interphone circuit. The system is activated by depressing the CALL button on the control panel. Energizing the CALL button does not interrupt the other signals being received, but the CALL signal will be somewhat louder than the other signals.

A cockpit loudspeaker, mounted over the pilot's station, can be used to monitor all signals heard through the pilot's headset. The speaker is controlled by an ON/OFF switch located on the speaker.

The HOT MIC buttons on the control panel permit direct transmission to all interphone stations on the flight deck, avionics area, and forward crew door, without pressing the microphone switch at the interphone station. The push-pull buttons are labeled TALK and LISTEN and must be pulled out for hot microphone mode of operation.

The auxiliary control panel is installed in the vertical stabilizer. Operation from this position is limited to interphone.

C-2105 AUXILIARY CONTROL PANEL

There are 3 external receptacles installed on the forward fuselage, left wheel well, and right wheel well to permit interphone communications between flight and ground personnel. The receptacle on the forward fuselage is wired into the center avionics equipment rack control panel. The left and right wheel well receptacles are wired into the left and right jump door interphone control panels respectively.

Public Address System AN/AIC-13

The public address system allows the crew to broadcast interphone or stations received on the ADF receivers throughout the cargo compartment. The system consists of a main control panel, three auxiliary control panels, a public address switch, three amplifiers and six speakers.

The required 28 volts DC power for operation is provided from the DC Avionics Bus Nr 2, through a circuit breaker on the avionics circuit breaker panel.

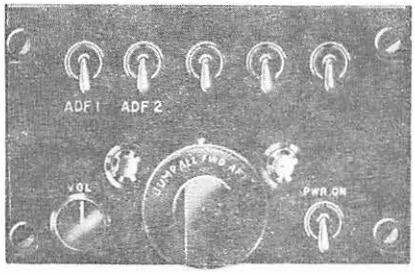

MAIN CONTROL PANEL

The main control panel is located at the flight engineer's station. This panel has complete operational control of the system. The panel consists of a power ON/OFF switch, a speaker selector switch, a volume control, and five toggle switches. The power ON/OFF switch turns the system on or off. The speaker selector switch selects the desired speaker or speakers to be used. In the JUMP position, the speaker forward of each jump door is in operation; in the ALL position all six speakers are operational; in the FWD position only the most forward speaker (just aft of the cargo door) is operational; and in the AFT position only the aft troop door speaker is operational. The master volume control controls the volume of the entire system. Only the two toggle switches marked ADF 1 and ADF 2 are wired for operation. By placing them in the UP position, ADF reception is broadcast over the PA system. ADF reception is blocked out anytime the PA position is energized at the Jumpmaster/Loadmaster panels.

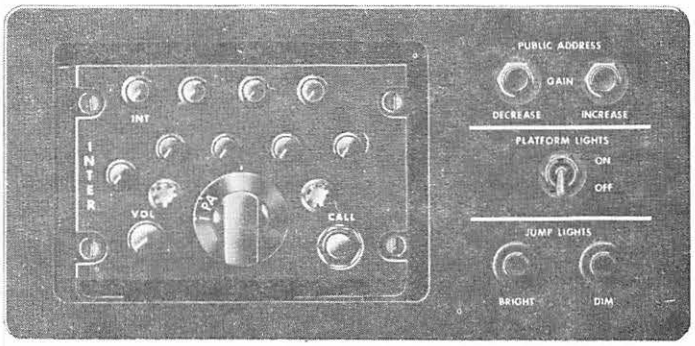

LH AND RH JUMPMASTER/LOADMASTER PANELS

Panels like the one illustrated above are located at the forward crew door and left and right jump doors. In addition to providing interphone reception and transmission capability, this panel affords the user the ability to transmit over the PA system, provided it is turned on at the main control panel. It also provides remote control of the volume level through the use of INCREASE and DECREASE buttons. These pushbuttons are electrically interlocked to prevent simultaneous increase or decrease operation.

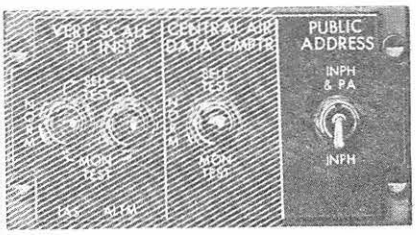

PILOT'S SIDE CONSOLE

The above switch is located at the pilot's side console. With the switch in the INPH & PA position, any signal broadcast over the interphone system will be amplified and transmitted over the PA system, provided the PA system is turned on. In the down or INPH position, interphone communications are restricted to the normal interphone circuits. In the INPH & PA position, the ADF receivers will not be heard through the PA speakers.

Speakers Nr 1, 2, and 3 are located forward of the troop doors, speakers Nr 4 and 5 are just forward of the troop doors, and speaker Nr 6 is aft of the troop doors.

The three amplifiers are on the center avionic rack. The Nr 1 amplifier supplies power for the Nr 1 and 3 speakers, and the Nr 2 amplifier powers the Nr 2 and 4 speakers. The Nr 3 amplifier powers the Nr 5 and 6 speakers.

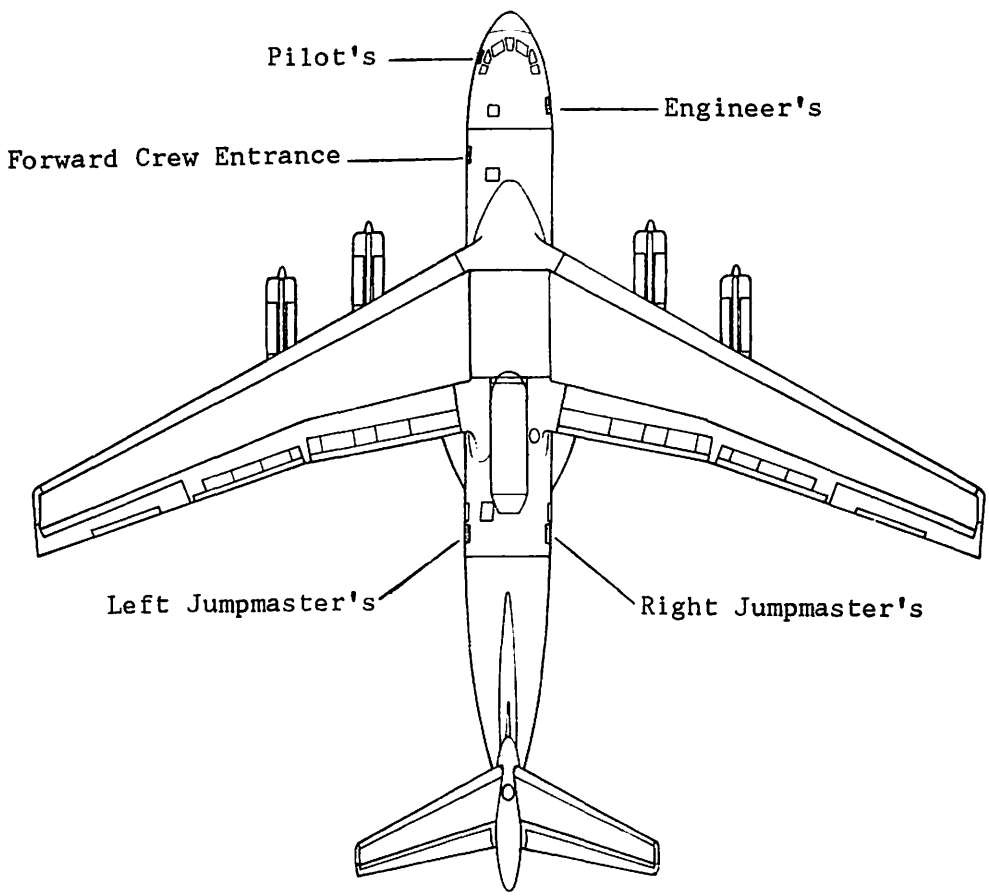

PUBLIC ADDRESS SYSTEM CONTROL PANEL LOCATIONS

5-5 3 min. warmup

5-10 3 min warmup

Chapter 3

VHF AND UHF SYSTEMS

VHF Command System

The Wilcox 807A VHF Command system provides VHF voice communications for air-to-air or air-to-ground on any one of 1360 operating frequencies.

Since the Wilcox 807A operates only at Very High Frequencies, its effective range is limited to line-of-sight distances and will vary with the altitude of the aircraft; i.e., approximately 40 miles at 1,000 feet, 135 miles at 10,000 feet, and 225 miles at 30,000 feet. Maximum range under optimum conditions will be about 300 miles at 41,000 feet.

Two complete VHF Command systems are installed in the aircraft. Both systems operate independently and can be used simultaneously. The frequency range of each system is from 116.000 through 149.975 MHz in 25 KHz steps, providing a total of 1360 crystal-controlled channels. All of the 1360 channels may be selected at the remote control.

The control panel on the left side of the center console is for VHF Nr 1 and the control panel on the right side is for VHF Nr 2. The control panel is a combination VHF COMM - VHF NAV control panel. The VHF COMM controls operate the VHF Command System.

The antenna for VHF Nr 1 is mounted on the bottom of the fuselage and the antenna for VHF Nr 2 is mounted on the top of the fuselage. No provisions are made for switching the antennas between the two systems. The two antenna locations allow the operator to select the antenna location for best system operation. The Nr 2 system with its antenna mounted on the top of the fuselage is usually the best selection for operating from the ground.

The VHF Nr 1 receives power from the isolated DC avionics bus through the VHF Nr 1 circuit breaker; VHF Nr 2 receives power from the DC avionics bus Nr 2 through the VHF Nr 2 circuit breaker. Both circuit breakers are located on the avionics circuit breaker panel.

The equipment consists of a transceiver and remote control. The operating controls and a brief description of their functions are listed below.

Power Switch - Turns equipment ON or OFF.

Frequency Dial - Indicates the selected operating frequency.

MHz Dial - Adjusts the frequency in 1 MHz steps.

25 KHz Dial - Adjusts the frequency in 25 KHz steps.

Volume Control - Increases or decreases the signal level in the headset.

Comm Test - Used to bypass the squelch circuit to test the receiver.

There is no button or switch on the control panel to check the transmitter. However, when sidetone is present the transmitter is operative. It is necessary to allow a minimum warmup of three minutes before keying the transmitter.

NOTE: Inasmuch as the squelch adjustment affects the receiving range,

this button could be used whenever the operator desired the maximum range of reception. However, the noise level may be so high there will be no increase in receiving range.

When the transmitter is keyed continuously for five minutes, the system should remain in the receive mode for five minutes prior to keying the transmitter again.

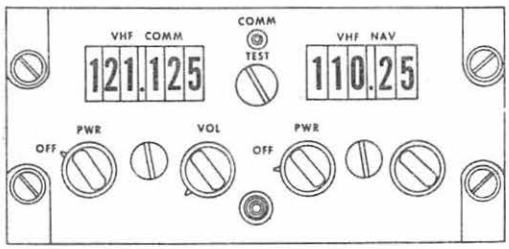

VHF CONTROL PANEL

UHF Command System

Two independently (or simultaneously) operated AN/ARC-90 UHF systems provide air-to-air or air-to-ground communications in the UHF Frequency band of 225.0 through 399.95 megahertz The frequencies are dialed in 1.0 and .05 MH_z steps. The operating range of the UHF Command system is limited to line-of-sight distances; i.e., at 1,000 feet approximately 40 nautical miles, 10,000 feet 135 nautical miles, and 225 nautical miles at 30,000 feet, with a maximum range of 300 nautical miles. Each system consists of a transceiver, a remote control panel, two antennas, and an antenna switching panel.

Power required is 28 volts DC and three phase 115 volts AC. The power for system Nr 1 is supplied by the isolated AC and isolated DC avionics buses. The power for the Nr 2 system is supplied from the AC avionics bus Nr 2 and the DC avionics bus Nr 2.

The circuit breakers for both systems are on the avionics circuit breaker panel.

Both transceivers are in the left avionic equipment rack. Each transceiver contains a main receiver, a guard receiver and a transmitter. The main receiver and transmitter may be tuned to any frequency within the range of the system. The guard receiver is semi-fixed tuned, and is preset to the emergency frequency of 243.0 MH_z.

The remote control panels are on the center console. The function switch turns the system on by selecting either the MAIN or BOTH position. The MAIN position selects only the main receiver. The BOTH position selects both the main and guard receivers. The transmitter is operational in either position.

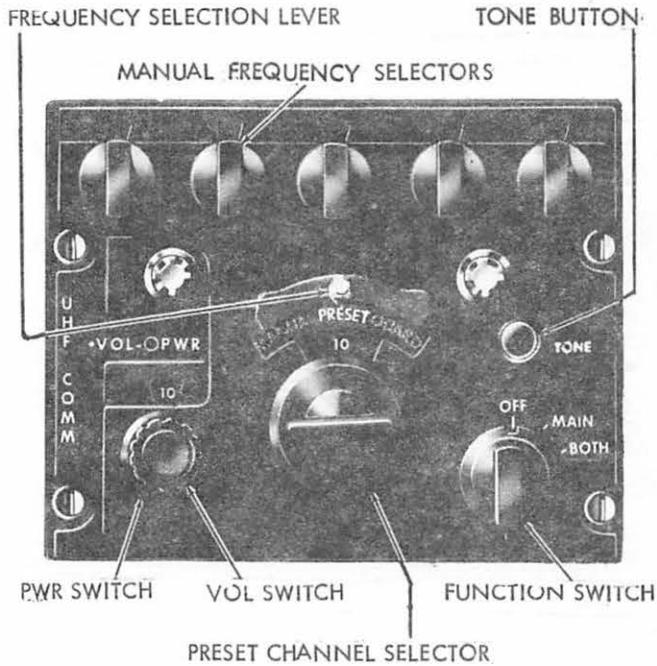

UHF CONTROL PANEL

The three-position Frequency Selector lever is used to select the method of main receiver and transmitter frequency control. The three positions are MANUAL, PRESET and GUARD. In the MANUAL position, frequency selection is accomplished with the five rotary switches at the top of the control panel. Any frequency within the range of the equipment may be selected. The selected frequency appears in the five windows above the switches. The PRESET position allows selection of twenty preset channels. The preset channel in use is shown in a window above the preset channel selector. The operating frequency of each channel may be obtained by consulting the UHF frequency cards in the aircraft. The installation of the new frequencies on the preset channels should be accomplished by ground personnel, as it is considered impractical and unnecessary in flight. The GUARD position automatically tunes the main receiver and transmitter to the emergency frequency.

The volume control adjusts the volume of the main and guard receivers. The power switch should always be set to 10 to provide maximum power output of the transmitter. Any setting below 10 will decrease the transmitting output, thus reducing the operating range.

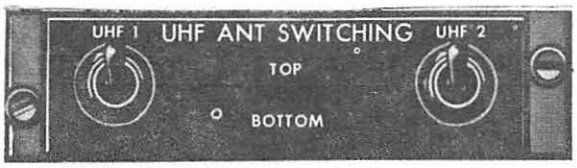

Two antennas are used with each system to eliminate signal fadeout due to location of the antenna. Each system has a top and bottom antenna which can be connected to the transceiver by the UHF ANT SWITCHING panel located on the center console. This panel contains two switches, one for the Nr 1 system and one for the Nr 2 system. The switch positions are TOP and BOTTOM. In the TOP and BOTTOM positions, the switching is controlled manually. In the blanked out position, both antennas are disconnected. If power is lost to the selector switch, the system will automatically select the top antenna.

Operation:

1. Function Switch - MAIN or BOTH
2. Power Switch - 10
3. Preset Channel Selector - 1 thru 20 (used only during PRESET mode)
4. Frequency Selector Lever - MANUAL, PRESET or GUARD
5. Volume - as desired

NOTE: The transmitter should not be continuously keyed for longer than five minutes, and should remain in the receive mode ten minutes if keyed for five minutes. Allow three minute warm-up prior to keying the transmitter.

CAUTION

The AN/ARC-90 system should not be turned on unless the avionics cooling fans are operating. Damage to the transceivers will result within minutes unless cooling fan operation is provided. Assure that the electronic cooling fan Nr 1 and Nr 2 circuit breakers are closed before turning on the system. These circuit breakers are located on the flight engineer's Nr 1 and Nr 2 circuit breaker panels, respectively.

Chapter 4

HIGH FREQUENCY SYSTEM

HF Command System

The Collins HF-102 is used for long range air-to-air or air-to-ground communications. The operating range of this equipment varies greatly due to atmospheric conditions, time of day, location, etc.; however, it is considered to be reliable up to a range of 1000 to 1500 miles.

There are two complete HF-102 communications systems, the HF Nr 1 and HF Nr 2. The frequency range of each system is from 2.0 MHz through 29.999 MHz The frequencies are spaced at 1 kc intervals, therefore 28,000 frequencies can be selected from the control panel.

Single Side Band Explanation

The HF-102 systems provide either conventional amplitude modulation (AM) or single side band (SSB) modes of operation. An amplitude modulated (AM) signal consists of a RF (Radio Frequency) carrier modulated by a voice signal which produces two side bands, one above and one below the carrier frequency employed. These side bands, referred to as the upper side band (USB) and the lower side band (LSB), contain identical intelligence. Either side band, when demodulated, yields the same electrical information. The carrier frequency in this system contains no intelligence, but it is necessary due to receiver design.

Standard AM communications systems operate on the double side band principle, and are redundant; therefore, wasteful of valuable space in the allocated frequency spectrum. In single side band operation, one side band and the carrier frequency are suppressed and only the remaining side band is used for communications. Since these two methods are not compatible, ascertain the mode of operation for the frequency in use. Most ground stations operate both AM and SSB, but on different frequencies.

In addition to increasing the number of usable frequencies in a given band, the SSB principle also has other advantages over the conventional AM method of communications. These advantages are due to effective power output.

In SSB operations, the transmitter concentrates its full-rated power into one side band; whereas, in the AM mode, only about one-fourth of the rated output is applied to each side band. This feature of SSB results in two favorable features. First, all factors being equal (same noise level, distance, location, etc.) SSB signals will have a higher signal-to-noise ratio and therefore have a greater reliability. Secondly, due to the greater usable power output, the range of the SSB signal should be extended far beyond that of the AM signal.

HF-102

Power necessary for operation is 28 volts DC and 115 volts three phase AC. The HF Nr 1 system receives power from the Nr 1 avionics DC bus and from the Nr 1 avionics AC bus. The HF Nr 2 system receives power from the avionics DC bus Nr 2 and Nr 2 avionics AC bus. Each system is protected by one DC and three AC circuit breakers on the avionics circuit breaker panel.

Both transceivers are located in the center avionic equipment rack. The coupler accessory units are in the aft fuselage, and the antenna couplers are

in the horizontal stabilizer. A control panel for each transceiver is located on the center console. The HF Nr 1 control is on the left, and HF Nr 2 is on the right.

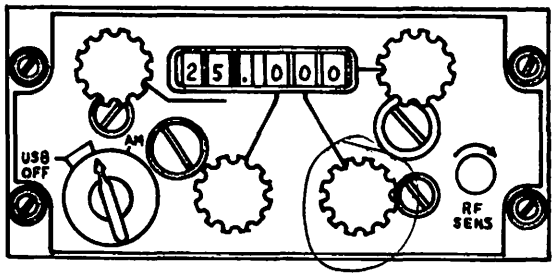

CONTROL PANEL

Each control panel has four dials which control the frequency selection for either SSB or AM modes. A direct numerical readout of the operating frequency will show in a window above the dials. A three position (OFF-USB-AM) function selector is used to energize the system and to select the mode of operation. In the USB position, the system operates as a SSB suppressed carrier system, using only the upper side band. In the AM position, the upper side band and carrier are used to provide a signal which is the equivalent of a normal AM signal. The RF SENS (sensitivity) control varies the sensitivity of the RF amplifiers in the receiver. The volume control (on the interphone control panel) and the RF SENS control should both be adjusted to receive the best signal-to-noise ratio. The RF SENS control must be set high enough to receive signals which are just above the noise level. The audio gain (volume control) then is adjusted to bring the signal to a comfortable listening level. Proper balance is indicated when the background noise is just audible and a weak signal is raised to a usable level.

Interlock between the two HF systems is provided by relays in the antenna coupler accessory and lightning arrestor units. The interlock circuits prevent both transceivers from being keyed simultaneously, and provides the necessary switching to enable one antenna to be used by both systems. Whichever set is keyed first will have priority.

Inasmuch as each frequency has a corresponding natural antenna length (for quarter wave-length) which varies from 123 feet at 2.0 MH_z, 13.7 feet at 18.0 MH_z to 9.8 feet at 25.0 MH_z, it is necessary to compensate for the fixed-length probe of the antenna. This compensation must be made to the antenna's electrical (or effective) length so that maximum power from the transmitter is radiated and not lost due to mismatch of impedance between antenna and transmitter.

The antenna tuning unit is activated after frequency selection by keying the transmitter. If tune-up is not achieved within approximately two minutes, a cut-out relay furnishes protection for the tuning units. This relay, when energized, will stop the tuning cycle by interrupting the keying circuit, thus disabling the transmitter. Re-selection of the desired frequency must preceed another tuning cycle. Also, if antenna coupler pressurization exceeds 10,000', the HF sets will become inoperative.

Operation

To Receive:

1. Function selector - USB or AM
2. Frequency dials - desired frequency

NOTE: When going from OFF to an operative mode, and the system has the desired frequency selected, the 10 KHz knob (lower right hand knob) must be tuned off frequency one digit then back to the desired frequency. This will allow the set to tune to the proper frequency. The R/T unit will mute while it is channeling to a new frequency.

3. RF SENS - as necessary

To Transmit: (Adjust all controls the same as receive operation, and proceed as follows.)

1. Microphone Selector - HF 1 or HF 2, key the transmitter momentarily. (This energizes the tuning system, and a 1000 cps tone will be heard in the headset. When the tone stops, the system should be ready to transmit.)

NOTE: Allow one minute for warmup.

NOTE: The transmitter should not be keyed continuously for more than five minutes, and should remain in the receive mode an equal length of time. 5 min

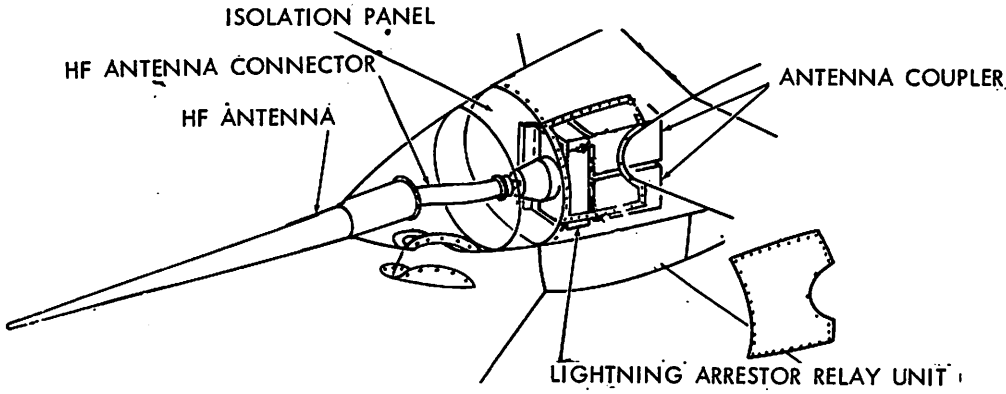

FORWARD EMPENNAGE BULLET

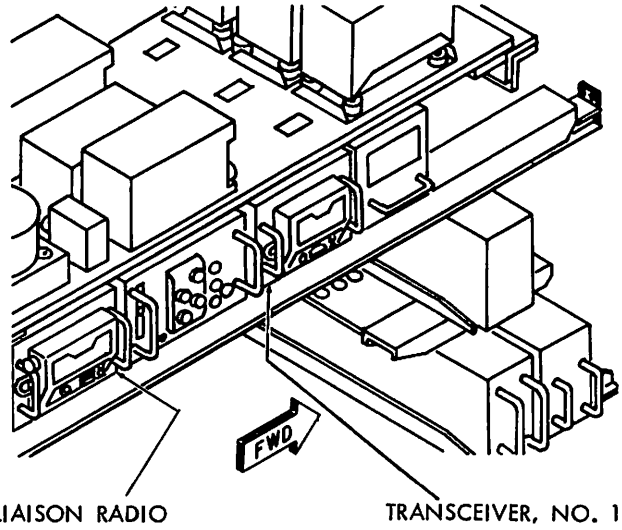

CENTER AVIONICS EQUIPMENT RACK

Chapter 5

IFF AND LOW RADAR ALTIMETER

IFF Radar (APX-64)

Introduction

On AF 65-0244 and up and aircraft modified by T.O. 1C-141A-837, an AN/APX-64 radar identification system provides automatic radar identification of the aircraft when interrogated by surface or airborne radar sets. The system enables friendly aircraft to identify themselves apart from other friendly aircraft and provides a means of transmitting a special coded signal known as an emergency reply. The system receives, detects, decodes, encodes and transmits signals. It recognizes a MODE 4 interrogation and decodes or encodes a reply.

An automatic altitude reporting function of the transponder, using CADC pressure altitude inputs, digitizes, encodes, and then automatically transmits this altitude in 100-foot increments when interrogated.

The system also provides an interphone tie-in (that circumvents the interphone selector switch to furnish a direct audio signal to the pilots whenever an interrogation is being made), and a UHF tie-in. The UHF tie-in is through two I/P relays that are energized by the "mike" switch and key the I/P function of the system.

Visual indications are also provided for monitoring system conditions. Two indicator REPLY lights on the IFF panel and an IFF annunciator light on the pilots' annunciator panel illuminate to indicate that no reply was made when interrogated.

The system receives power from the Emergency AC Bus and the Emergency DC Bus through two IFF circuit breakers located on the Emergency AC and DC Circuit Breaker Panel and from the Main DC Bus Nr 2 through an IFF TEST SET circuit breaker located on the Avionics Circuit Breaker Panel.

IFF Panel

Operation and control of the system is accomplished with the IFF panel (see Page 6-26) (Figure 4-10A, T.O. 1C-141A-1) which contains the following controls and indicators:

MASTER SWITCH: A rotary-type, five-position MASTER switch (7) allows the operator to select the following operating conditions: OFF, STBY, (Standby), LOW (Low Sensitivity), NORM (Normal Sensitivity), and EMER (Emergency). When the switch is set to OFF, all power is removed from the system. In STDY, operating power is applied and the system is ready for immediate operation when the MASTER switch is set to LOW or NORM. However, when in STBY, the absence of replies when interrogated in MODE 4 causes the IFF annunicator light to illuminate and an audio signal to be generated. When the MASTER switch is set to EMER, the system transmits an emergency reply when interrogated.

IDENTIFICATION-OUT-MIC SWITCH: A three-position, IDENT, OUT, MIC toggle switch (10) controls the identification function. When the switch is set to IDENT, and the MODE 1 or MODE 3 coder group selector control has a code set in, the system generates coded replies for MODES 1 through 3.

IFF PANELS

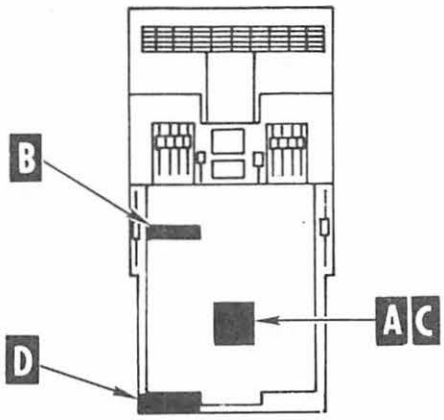

APX-64 (C-6280)

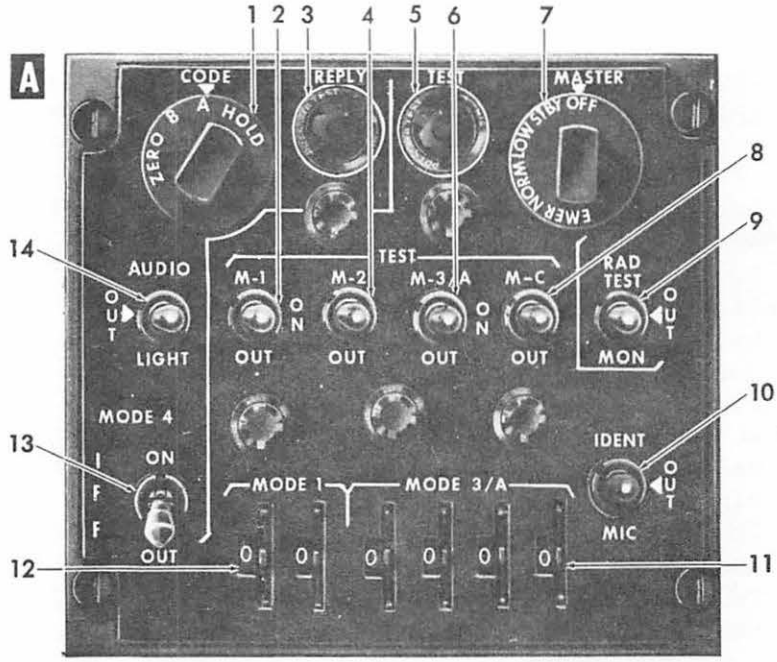

ON 50244 AND UP AND AIRCRAFT MODIFIED BY T.O. 837

ON 60131 AND UP AND AIRCRAFT MODIFIED BY T.O. 969.

ON 50244 THROUGH 60130 NOT MODIFIED BY T.O. 969 AND AIRCRAFT MODIFIED BY T.O. 837 BUT NOT MODIFIED BY T.O. 969.

1. MODE 4 INDICATION FUNCTION SWITCH
2. MODE 1 ENABLE AND TEST SWITCH
3. MODE 4 REPLY INDICATOR LIGHT
4. MODE 2 ENABLE AND TEST SWITCH
5. MODE REPLY SELF-TEST INDICATOR LIGHT
6. MODE 3/A ENABLE AND TEST SWITCH
7. IFF MASTER SWITCH
8. MODE C ALTITUDE REPORTING ENABLE AND TEST SWITCH
9. RADIATION TEST-MONITOR ENABLE SWITCH
10. IDENTIFICATION-OUT-MIC SWITCH
11. MODE 3/A CODE SELECTORS
12. MODE 1 CODE SELECTORS
13. MODE 4 ENABLE SWITCH
14. MODE 4 INDICATION SWITCH

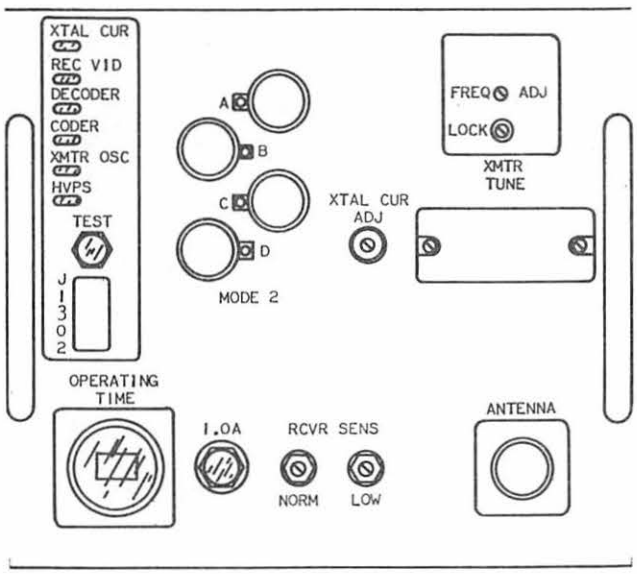

RECEIVER-TRANSMITTER (TRANSPONDER)

MODE C and 4 are not affected. The IDENT pulse trains are transmitted from 15 to 30 seconds, plus the time the switch is held to IDENT. The switch is spring-returned to the OUT position. The OUT position disables the IDENT function. When the MIC position is selected, control of the IDENT function is transferred to a point remote from the control panel.

MODE 1 ENABLE AND TEST SWITCH: A three-position, spring-returned to ON toggle-type switch (2) allows the operator to enable and test MODE 1. The self-test REPLY indicator light illuminates when a reply is made to an interrogation. When the switch is held in the TEST position, the "go-no go" airborne transponder in-flight tester becomes energized, and generates MODE 1 interrogations. The ON position enables the MODE 1 function, and the OUT position disables the MODE 1 function.

MODE 2 ENABLE AND TEST SWITCH: This switch (4) is the same as the MODE 1 switch and performs functionally for MODE 2 in the same manner as the MODE 1 switch.

MODE 3/A ENABLE AND TEST SWITCH: This switch (6) is the same as the MODE 1 switch and performs functionally for MODE 2 in the same manner as the MODE 1 switch.

MODE C ALTITUDE REPORTING ENABLE AND TEST SWITCH: This switch (8) is the same as the MODE 1 switch and performs functionally for MODE C in the same manner as the MODE 1 switch, except that it controls and tests the altitude reporting mode.

NOTE: MODE 4 description and function is contained in T.O. 12P4-2APX64-2.

MODE 4 ENABLE SWITCH: A two-position, leverlock type switch (13) is provided for control of the MODE 4 operation. When placed to ON, the switch is in the up and locked position and MODE 4 is enabled. When the switch is unlocked and moved down, it is in the OUT position.

MODE 4 INDICATION SWITCH: A three-position, (AUDIO, OUT, LIGHT) toggle-type switch (14) is provided for control of the MODE 4 indication. The AUDIO position enables both the visual and audio reply indication. The OUT position disables the MODE 4 indication function of the system. When the switch is placed to LIGHT, only the visual indication is enabled.

MODE 4 INDICATION FUNCTION SWITCH: A four position, (HOLD, "A", "B", ZERO) rotary-type switch (1) is provided for control of MODE 4 operation. The HOLD position is spring-loaded for momentary contact to permit return to the "A" position when manual pressure is released. To move to the ZERO position, the switch must be pulled up and rotated.

RADIATION TEST-MONITOR ENABLE SWITCH: A three-position (RAD TEST, OUT, MON), toggle-type switch (9) is provided for control of the monitor and radiation test functions of the system. When the switch is placed to RAD TEST, the test mode feature of the transponder is energized during checkout with the IFF test set. This position is spring-loaded for momentary contact and returns to the OUT position when released from the RAD TEST position. When placed to the MON position, the monitor circuits of the "go-no go" airborne transponder inflight tester are enabled, and the self-test REPLY indicator light illuminates when a reply is made to interrogation on any mode.

MODE 1 CODE SELECTORS: These selectors (12) consist of two in-line edgewise-mounted thumb wheels which select the MODE 1 codes, and are continuously rotatable with no stops. The left wheel has eight positions, numbered "0" through "7" consecutively. The right wheel is similar to the left except that the numbering is "0" through "3", appearing twice (once on each half of the drum).

MODE 3/A CODE SELECTORS: These selectors (11) consist of four in-line edgewise-mounted thumb wheels which select the MODE 3 codes, and are continuously rotatable with no stops. Each wheel has eight positions, numbered "0" through "7" consecutively.

MODE REPLY SELF-TEST INDICATOR LIGHT: A green REPLY indicator light (5) is provided to indicate satisfactory operation of the transponder for self tests of Modes 1, 2, 3, and C and for monitoring proper response to any interrogation.

MODE 4 REPLY INDICATOR LIGHT: A green indicator light (3) is provided for indication of MODE 4 replies that occur when the MODE 4 indication switch is either in the AUDIO or LIGHT position.

IFF WARNING INDICATOR LIGHT: An IFF indicator light on the annunicator panel is provided to warn the pilots that they have been interrogated in MODE 4 but have not replied.

NOTE: The IFF annunciator light should not illuminate until the MODE 4 Computer is installed. The light has, on occasion, illuminated for reasons unknown. To prevent this, the IFF annunciator light is disabled on AF 65-0269 and up and aircraft modified by T.O. 1C-141A-1129.

Low Altitude Radar Altimeter

When installed, the low altitude radar altimeter provides accurate aircraft altitude indications for low level flying and landings.

The receiver/transmitter is on the upper left side of the cargo compartment under the main wing beam. The antennas are flush mounted on the bottom of the left main landing gear pod. The indicator with its controls is mounted on the center instrument panel above the pilot's radar scope.

The low altitude radar altimeter receives power from the 115 volt Avionics AC Bus Nr 1 through a RADAR ALTM circuit breaker.

The system is placed into operation by moving the OFF-ON power and functional test switch on the indicator, to the ON position. System operation can be tested by DEPRESSING the PRESS TO TEST button, which is part of the OFF-ON power and functional test switch.

The altitude pointer indicates the altitude in 20-foot increments between zero and 2500 feet. When the altitude pointer is indicating in the 0-1000 foot range, the altitude pointer turns counter window is blank. In the 1000 to 2000 foot range, a one (1) is displayed in the window. When in the 2000-2500 foot range, a two (2) is displayed in the altitude pointer turns counter window.

The altitude trip set knob sets in the desired flight altitude. Rotating the knob positions the altitude trip marker to the desired trip altitude, with the altitude trip turns counter window registering in thousands of feet, the selected altitude. If the aircraft descends below the set altitude, the ALTITUDE TRIP light will illuminate.

RADAR ALTIMETER

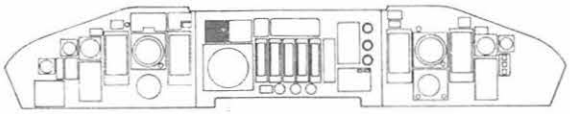

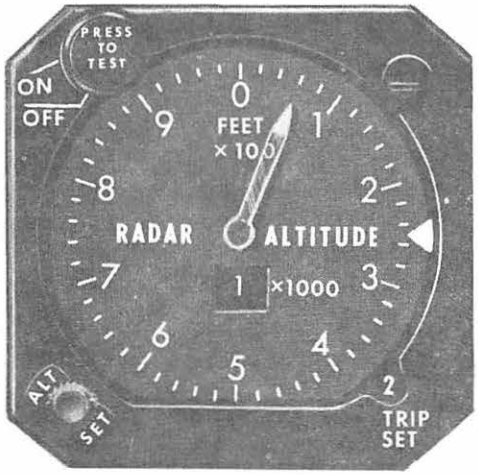

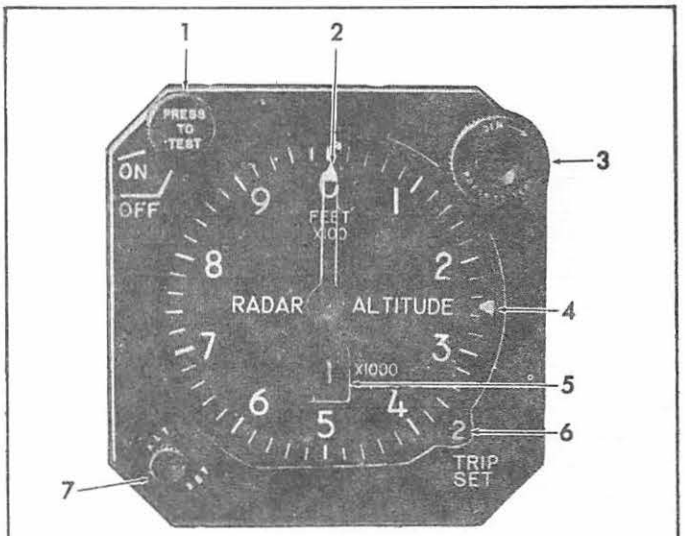

60132 thru 67958 IF NOT MODIFIED BY T.O. 969

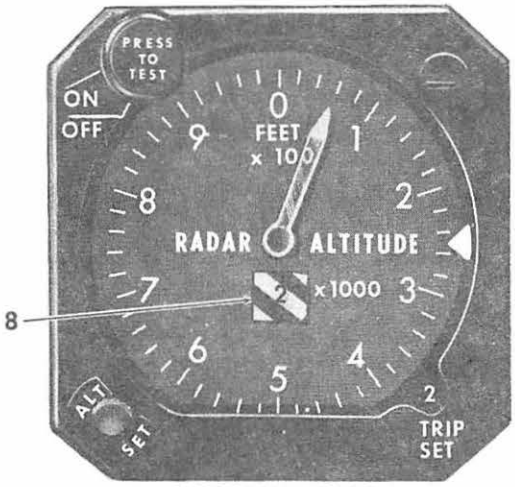

WARNING FLAG

APPEARS FOR SYSTEM MALFUNCTION, OR DURING FUNCTIONAL TEST

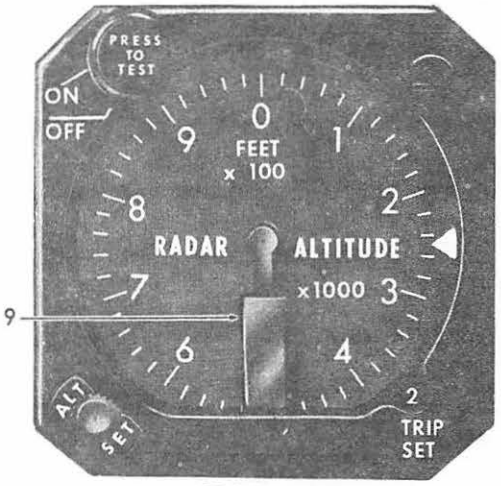

FLAG MASK

APPEARS FOR POWER OFF CONDITION, OR DURING OPERATION ABOVE 2500 FEET

1. POWER AND FUNCTIONAL TEST SWITCH
2. ALTITUDE POINTER
3. ALTITUDE TRIP LIGHT
4. ALTITUDE TRIP MARKER
5. ALTITUDE POINTER TURNS COUNTER
6. ALTITUDE TRIP TURNS COUNTER
7. ALTITUDE TRIP SET KNOB
8. WARNING FLAG
9. FLAG MASK

Chapter 6

AN/APN-59B SEARCH RADAR SYSTEM

Introduction

All information from the APN-59B System is presented on indicators (scopes) at the pilot's and navigator's positions.

In SEARCH, the APN-59B presents an electronic map of the earth's surface below the aircraft. It displays both geographical features and cultural features such as ships, railroads, and cities.

In BEACON, the APN-59B interrogates ground radar beacons (RACONS) as an additional navigational aid. During this function, groups of bars spaced according to the code identification of the RACON are displayed at the range and azimuth of the beacon.

In WARN (Warning), the APN-59B shows weather phenomena, such as storm fronts, squall lines, and areas of high moisture content. During weather surveillance, a storm can be better identified and its center located with use of the Iso-Echo Control.

The indicator presentation is a plan position indicator (PPI) display, which places the aircraft at the center of the display. Range of targets may be determined by range marks, which are concentric circles on the PPI display. Range displays can be varied from 3 to 240 miles, with varying distances between range marks. Target azimuth can be determined by placing the cross hairs of the cursor over the target and reading the bearing on the stationary azimuth ring.

Components

The receiver-transmitter and antenna which are installed in the nose section.

The stabilization data generator is located in the nose section.

The electronic control amplifier is located in the nose section.

The radar set control panel is located at the navigator's position.

The synchronizer control panel is located at the navigator's position.

Also at the navigator's position are the variable antenna control panel and the marker generator control panel.

There are two indicators (scopes), one located on the pilots' center instrument panel, and one at the navigator's position.

Power

Power for operation of the APN-59B is provided by the Avionics Buses. The power used is 28 volt DC and 115 volt, 2 phase AC. The circuit breakers are located on the Avionics Circuit Breaker Panel.

Operation

The proper power must be available.

Set up the Radar Set Control Panel at navigator's station, which is the primary control panel of this system.

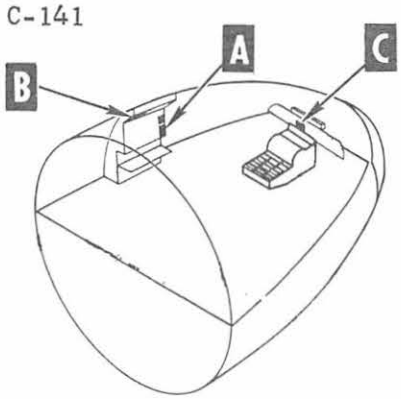

1. NAVIGATORS STATION
2. NAV RADAR CIRCUIT BREAKERS
3. AVIONICS CIRCUIT BREAKER PANEL
4. RADAR SET CONTROL PANEL
5. SYNCHRONIZER CONTROL PANEL
6. NAVIGATORS INDICATOR
7. MARKER GENERATOR CONTROL PANEL
8. ANTENNA CONTROL PANEL
9. MAIN INSTRUMENT PANEL
10. ISO-ECHO SWITCH PANEL
11. PILOTS INDICATOR

NOTE

1 AIRCRAFT AF61-2778 AND UP.

2 AIRCRAFT AF61-2778 THROUGH AF63-8075, AF63-8081 AND UP.

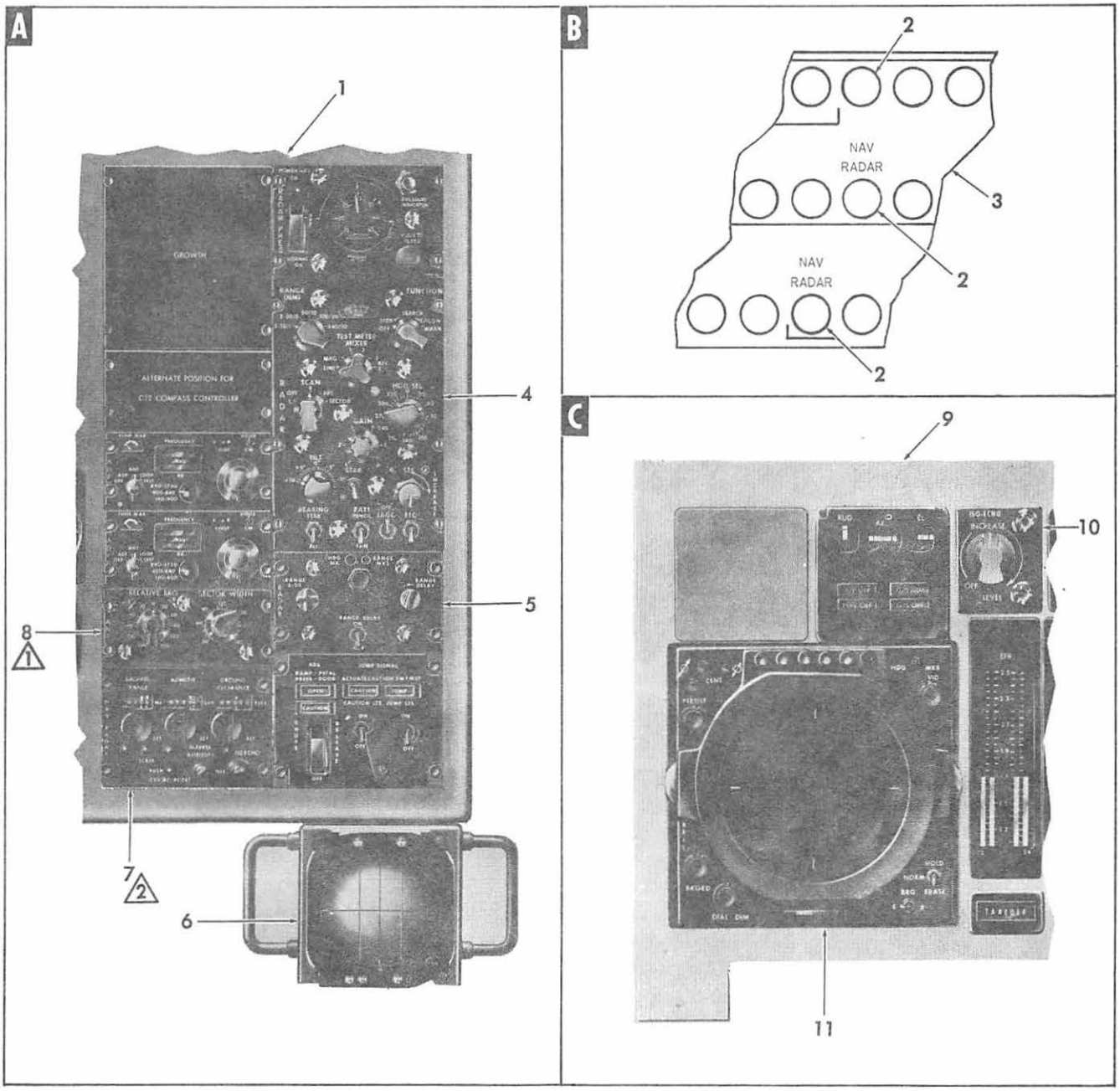

APN-59B INDICATORS, PANELS AND CIRCUIT BREAKERS LOCATIONS

Set up the Navigator's Scope and Pilots' Scope.

Set up the remaining panels as required for specific types of operation.

Details of each control panel are listed below, with the functions of the controls.

NOTE: It must be remembered that for some functions, the controls on more than one panel must be used together to obtain the best results.

Radar Set Control Panel

This panel is located at the navigator's station. It is the primary control for the APN-59B. It is used to turn the set ON and OFF and to set up the various types of operation.

FUNCTION Switch. In OFF, all power is removed except for panel illumination. In STDBY, the system is warming up, and the transmitter is inoperative. A minimum of 3 to 5 minutes of warmup time is provided by thermal relays in the system. In SEARCH, the system is operational for electronic mapping. In BEACON, the set will interrogate ground beacon stations. In WARN (Warning), the iso-echo feature becomes operational.

RANGE (NM) Switch. Used in SEARCH, BEACON, and WARN. Used to select any one of five different ranges. The positions are 3-30/1, 3-30/5, 50/10, 100/20, and 240/30. The first number indicates the range and the second number the distance between range markers. In the 3-30 settings, the display can be either 0 to 3 NM or 0 to 30 NM. This is controlled by the RANGE 3-30 Control on the Synchronizer Control Panel, which is a separate control panel at the navigator's station.

SCAN Switch. Used to control the direction and speed of the antenna scan. In the "L" position, the antenna rotates counterclockwise at 13 rpm. In OFF, the antenna is stationary. In "R" position, the antenna rotates clockwise at 13 rpm.

In PPI position, the antenna rotates clockwise at 45 rpm in the shorter ranges (50 NM or less) and at 13 rpm in the longer ranges. The faster rotation allows the operator to more accurately interpret close-in targets, such as during an airborne radar approach.

In SECTOR, the antenna scans a 180° sector in front of the aircraft or 90° on either side of the nose. In this SECTOR position, the Antenna Control Panel (also at the navigator's panel) is energized and the sector to be examined and the width of the sector can be moved as desired.

PATT (Pattern) Switch. Used to select the type of beam radiated by the radar antenna. In PENCIL, the beam is narrow, both vertically and horizontally. In this position, the beam can be likened to a searchlight beam and is used primarily in the weather (WARN) mode. In FAN, the beam is fan-shaped vertically and narrow horizontally.

TILT Control. Used to tilt the radar beam up or down. Settings provide tilt from 10 degrees above horizontal to 15 degrees below. Primary use by pilot is to determine the altitude of severe weather.

STAB (Stabilization) Switch. Used to control the stabilization of the radar antenna. In the UP position, the antenna is gyro-stabilized to the horizontal plane of the earth's surface despite pitching or rolling of the aircraft. The APN-59B is usually

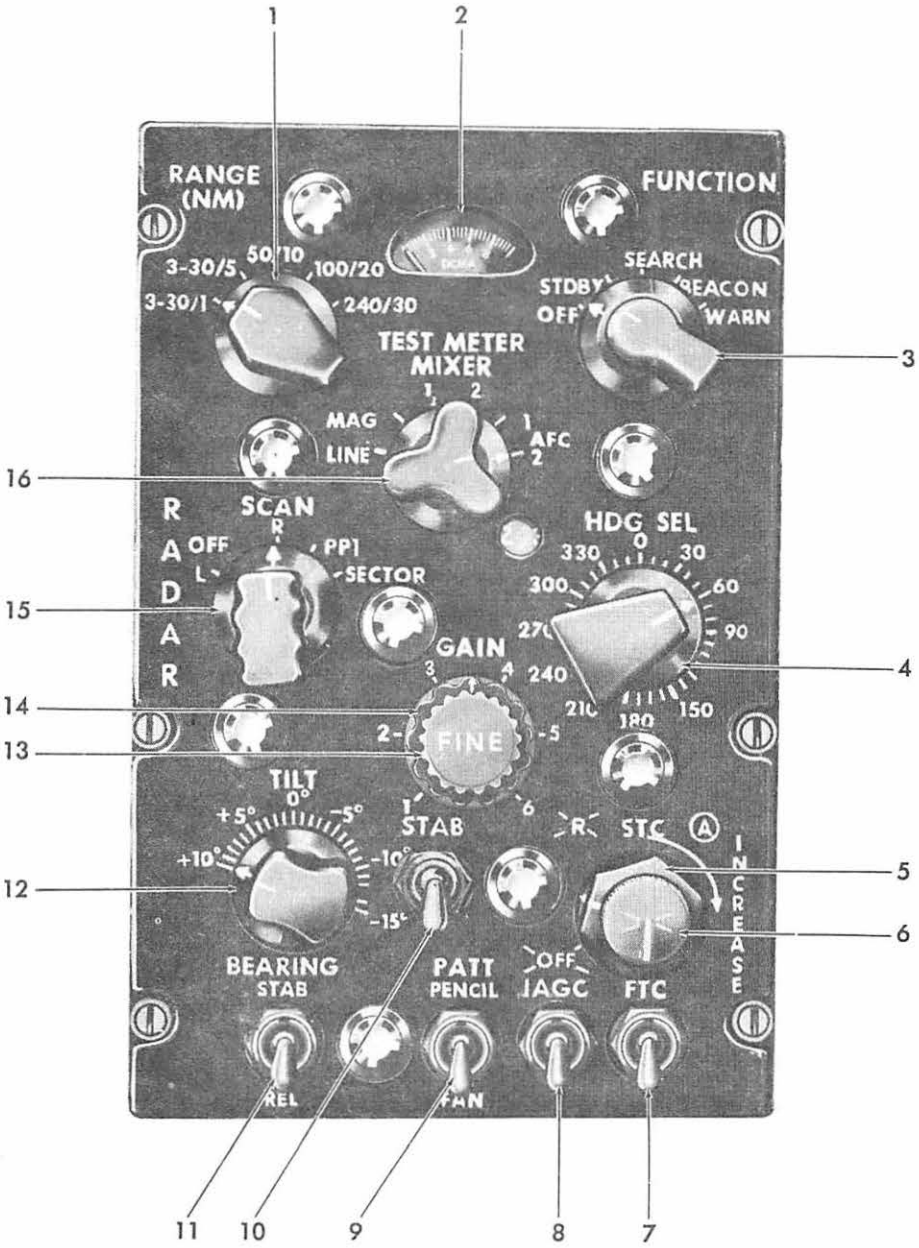

1. RANGE (NM) SWITCH
2. TEST METER
3. FUNCTION SWITCH
4. HDG SEL CONTROL
5. STC AMPLITUDE CONTROL
6. STC RANGE CONTROL
7. FTC SWITCH
8. IAGC SWITCH
9. PATT SWITCH
10. STAB SWITCH
11. BEARING SWITCH
12. TILT CONTROL
13. FINE GAIN CONTROL
14. COARSE GAIN CONTROL
15. SCAN SWITCH
16. TEST METER SWITCH

RADAR SET CONTROL PANEL

operated with the STAB Switch in the UP position. In the DOWN position, the antenna is locked to the aircraft and the display will be distorted as the aircraft rolls or pitches.

BEARING Switch. Sets up a reference point on the compass card of the scope where the heading marker will appear. In REL (Relative) the heading marker appears at the top of the scope (if the HDG SEL Control is at "0"). In STAB, the heading marker moves to a position determined by the C-12 Compass System Nr 2. While in STAB, the heading marker position is influenced by the operation of the HDG SEL Control (see below).

HDG SEL (Heading Select) Control. Is used to rotate the radar scope presentation. With BEARING Switch at STAB and HDG SEL Control at "0", the heading marker indicates the magnetic/gyro heading of C-12 Compass System Nr 2. As the HDG SEL Control is rotated away from "0" to any other position, the heading marker is moved to the selected heading. Easterly variation is selected by counterclockwise rotation and west variation by clockwise rotation of the HDG SEL Control. The numeral in the window to the left of the HDG SEL Control shows the setting to the nearest 10 degree increment left or right of "0". When the correct variation is selected, the heading marker will indicate true heading.

GAIN Controls. There are two gain controls. The outer knob is the coarse control and the inner knob is the fine control. They are used to control the brightness and sharpness of the display. Start with the coarse control, turning clockwise until the display is very bright. Then the fine control is used until the rough edges are removed and a good clean display is presented. Before operating the APN-59B, both controls should be fully counterclockwise! Notice that these controls are used in conjunction with the INT Control on the navigator's scope and the VID Control on the pilots' scope to get the best displays.

STC (Sensitivity Time Controls) Controls. Used to control the indicator display by reducing the gain of short range returns. This provides a more uniform contrast across the display. The inner knob is used for intensity control. The outer knob is used for range control up to 40 NM. Inner knob is moved full counterclockwise for OFF.

IAGC (Instantaneous Automatic Gain Control) Switch. Used to distort the large amplitude signals in the receiver to improve the indicator display. It does this by reducing the amplitude of strong returns (anti-clutter). UP is the operating position.

FTC (Fast Time Constant) Switch. Used to distort long-duration signals in the receiver to improve the indicator display. These long-duration signals would blend together, but FTC causes them to break up into individual targets. UP is the operating position.

NOTE: STC Control, IAGC Switch, and FTC Switch are NOT used when obtaining WEATHER information.

TEST METER MIXER Switch. Used to check voltage of various circuits within the APN-59B. A TEST METER is provided for the voltage indications. Voltage readings should be steady. The MAG (Magnetron) setting should be selected when the APN-59B is being used.

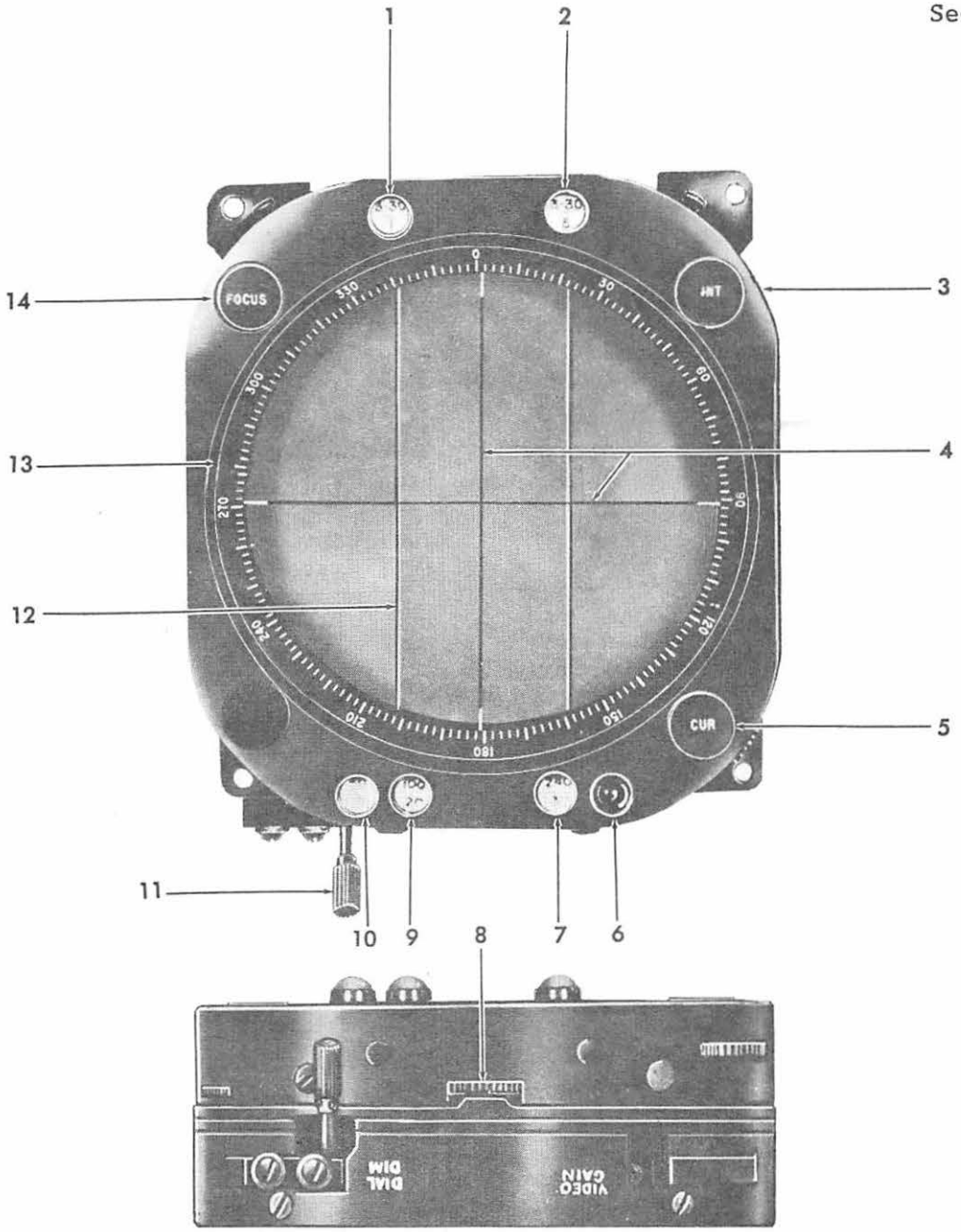

1. 3-30/1 RANGE LAMP
2. 3-30/5 RANGE LAMP
3. INT CONTROL
4. CURSOR CROSS HAIR
5. CUR CONTROL
6. TD RANGE LAMP
7. 240/30 RANGE LAMP
8. RECTICLE CONTROL
9. 100/20 RANGE LAMP
10. 50/10 RANGE LAMP
11. DIAL DIM CONTROL
12. RETICLE
13. AZIMUTH RING
14. FOCUS CONTROL

NAVIGATOR'S SCOPE

Navigator's Indicator

This indicator (scope) is located below the APN-59B control panels at the navigator's station. Once the radar set control panel controls and switches have been positioned, the controls on this scope are used to obtain the desired display.

INT (Intensity) Control. Used to adjust the intensity of the display. Use in conjunction with GAIN Controls on Radar Set Control Panel. At optimum setting, a faint but clear trace is displayed.

CAUTION

During the initial warmup and during operation in STDBY, the INT controls must be at their extreme counterclockwise position. Failure to observe this caution will result in burned spots on the PPI screens.

FOCUS Control. Used to sharpen the display. Trace line blurs at either side of the proper control setting.

RANGE Lamps. There are six of these lamps, two at the top and four at the bottom of the indicator. The proper lamp illuminates to show the range setting being used. The TD Lamp indicates time delay operation.

DIAL DIM Control. Adjusts the azimuth ring illumination.

The display is a PPI presentation. Distance to a target is indicated by range marks. A stationary azimuth ring and rotatable cursor are used to determine target bearings. A heading marker appears each time the antenna rotates past the aircraft lubber line.

Pilots' Indicator

This indicator (scope) is located on the pilots' center instrument panel.

CENT (Centering) Controls. Used to center the starting point of the indicator sweep trace and the sharpness of the trace. These are screwdriver type adjustments.

RANGE Lamps. Six at top of scope. Illuminate individually to show which range is being displayed on the indicator. The TD Lamp indicates time delay operation.

HDG MKR (Heading Marker) Control. Adjusts the intensity of the heading marker on the scope. Turn clockwise to increase.

MKR VID (Marker Video) Control. Used to intensify the display. Clockwise rotation increases brightness.

HOLD-ERASE-NORM Switch. In HOLD, the display can be held for a more complete reading of the features being displayed. Minimum useage of this position is recommended to prevent the burning of the scope. In ERASE, all previous information is removed. In NORM, normal display is obtained.

BRG S-R Switch. Used to select Slave ("S") or Relative ("R") for azimuth reference on the scope. In "S", the pilots' display is slaved to the navigator's. In "R", the pilots' display is independent of the navigator's display, with the aircraft heading at the top of the scope.

DIAL DIM Control. Used to adjust the azimuth ring illumination.

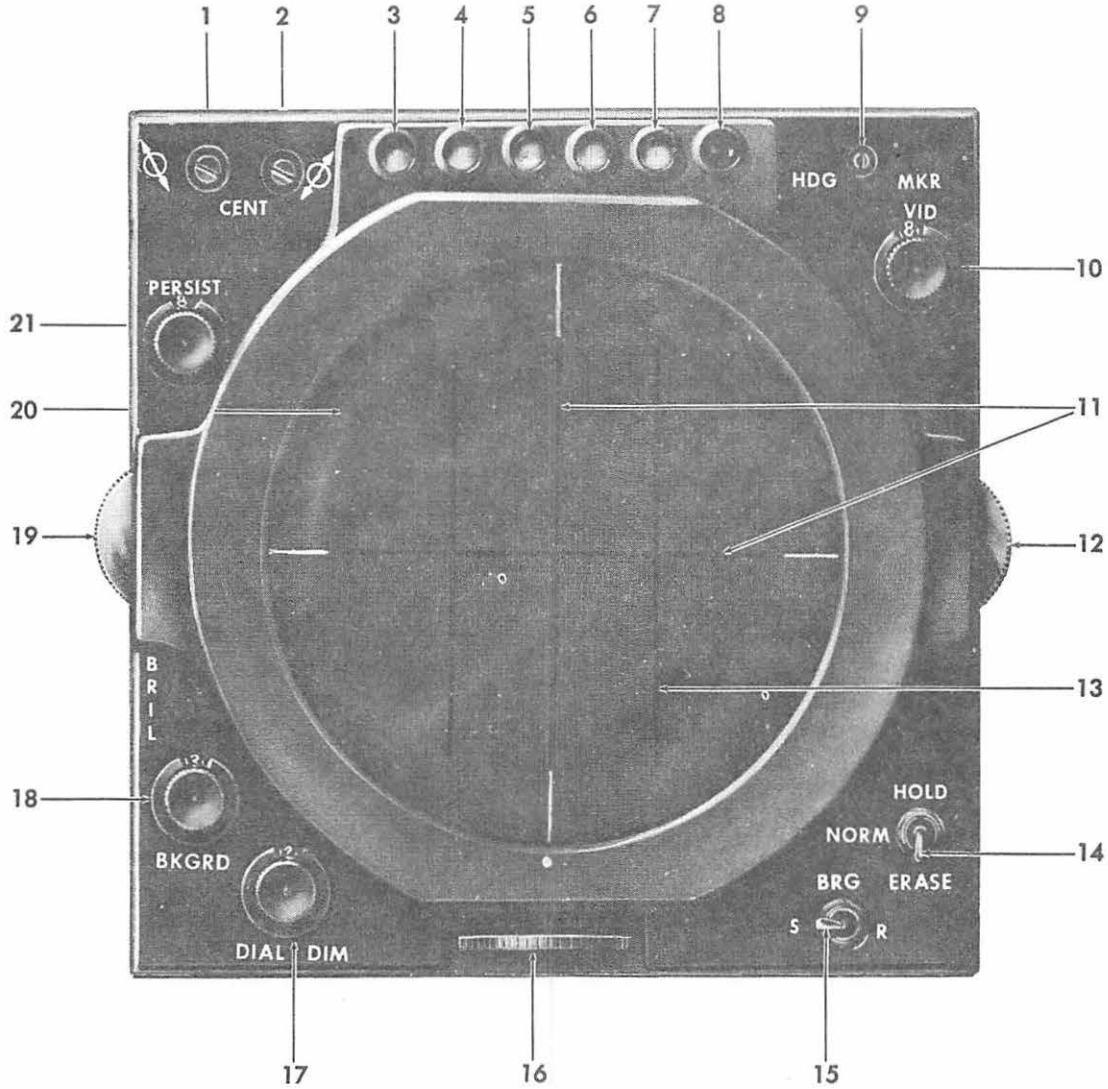

1. CENT CONTROL
2. CENT CONTROL
3. 3-30/1 RANGE LAMP
4. 3-30/5 RANGE LAMP
5. 50/10 RANGE LAMP
6. 100/20 RANGE LAMP
7. 240/30 RANGE LAMP
8. TD LAMP
9. HDG MKR CONTROL
10. VID CONTROL
11. CURSOR CROSSHAIR
12. CSR CONTROL
13. RETICLE
14. HOLD-ERASE-NORM SWITCH
15. BRG S-R SWITCH
16. RETICLE CONTROL
17. DIAL DIM CONTROL
18. BKGRD CONTROL
19. BRILL CONTROL
20. AZIMUTH RING
21. PERSIST CONTROL

PILOTS' SCOPE

BKGRD (Background) Control. Varies the intensity of background and intensifies the display.

BRIL (Brilliance) Control. Operates a polaroid filter for viewing in dark environment.

PERSIST Control. Used to control the duration of the display. Turning the control counterclockwise allows maximum erasure and minimum display. Movement of control clockwise allows display over one full PPI rotation.

The pilots' indicator also has an azimuth ring and cursor. Range and heading markers are available for distance and direction readings.

ISO-ECHO Control Panels

There are two iso-echo control panels. One is located at the navigator's station on the marker generator control panel and the other is on the pilots' center instrument panel above the indicator. Used only during weather observation.

Turning the control clockwise removes background echoes and allows the areas of greatest storm intensity to be pinpointed. This is indicated by a blank spot appearing in the target display.

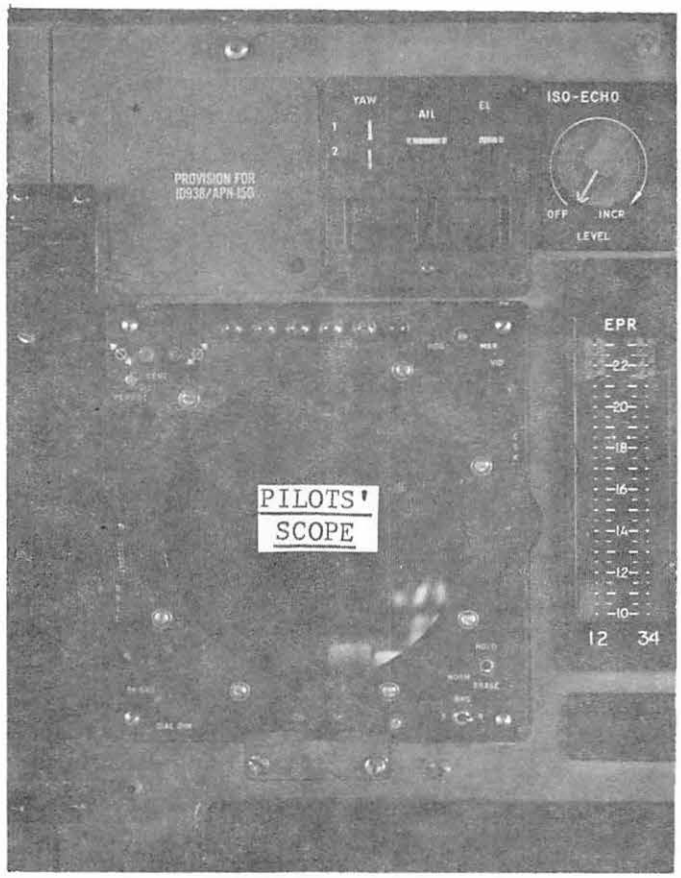

PILOTS' ISO-ECHO CONTROL

Marker Generator Control Panel

This panel is located at the navigator's position. With this panel, the navigator can plot a fix and then feed this information into the navigational computer to update the computer.

GROUND RANGE CONTROL AND COUNTER. Used to inser the range to a selected target. Counter shows nautical miles either slant or ground range, dependant upon setting of ground clearance control.

GROUND CLEARANCE CONTROL AND COUNTER. Used to insert Aircraft altitude over a target. When counter reads 0000 the distance to target would be slant range, thus with altitude above target inserted the distance would be Ground range.

AZIMUTH CONTROL AND COUNTER. Used to select magnetic of a selected target.

0-30 and 0-300 SCALE RANGE Lamps. Indicate the scale used for GROUND RANGE Counter (see above). The scale in use is controlled by the Radar Set Control Panel. The 0-30 Lamp illuminates when 0-30 NM range is selected. The 0-300 Lamp illuminates when using any of the other ranges.

MARKER INTENSITY Control. Varies the intensity of the azimuth marker and precision range marker. The control should be centered to black out azimuth and ground range markers when not using the marker generator control panel.

COORD INSERT Switch and Lamp. Transfers ground range and azimuth signals to the computer. Hold the switch in until light comes ON to show that the transfer of the information has been completed.

ISO-ECHO Control and Lamp. Covered under ISO-ECHO Controls. When lamp is ON, the navigator's ISO-ECHO Control is inoperative.

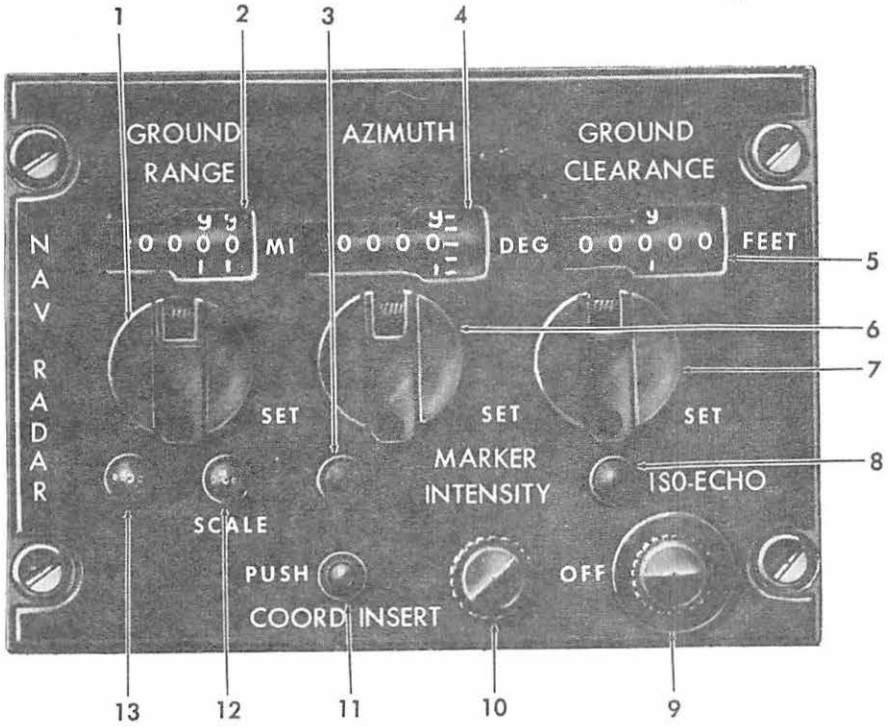

1. GROUND RANGE SET CONTROL
2. GROUND RANGE COUNTER
3. COORD INSERT LAMP
4. AZIMUTH COUNTER
5. GROUND CLEARANCE COUNTER
6. AZIMUTH SET CONTROL
7. GROUND CLEARANCE SET CONTROL
8. ISO-ECHO LAMP
9. ISO-ECHO CONTROL
10. MARKER INTENSITY CONTROL
11. COORD INSERT SWITCH
12. 0-300 SCALE RANGE LAMP
13. 0-30 SCALE RANGE LAMP

MARKER GENERATOR CONTROL PANEL

Synchronizer Control Panel

RANGE DELAY Control. Used to set the distance before sweep start.

For example, the APN-59B is in the 100-20 range. This means APN-59B is searching 100 miles ahead and has five 20 NM range markers on the scope. If we want to look closer at a target, the RANGE DELAY Control is turned clockwise and another range marker appears. Continue turning RANGE DELAY Control until new marker merges with range marker at desired distance. (Example: At the 100 mile marker.) Delay selection limits are between 15 and 210 miles.

Then place RANGE DELAY Switch to the ON position. At this time, all range markers disappear and you have a bright area in the center of the scope. This bright area is the range selected. With RANGE DELAY Switch ON, the 3-30/5 lamp and TD (Time Delay) lamp come on.

Now position the RANGE 3-30 Control. At full counterclockwise position, the range is 3 miles, thus if we had delayed the sweep at 100 miles, we now would be looking at a 100-103 mile area. Further adjustment clockwise would give you up to a 30 mile range (or in our example, 100-130 mile range). With operation of the RANGE 3-30 Control, new range markers appear and give us ranges to the target.

RANGE DELAY Switch. Used with RANGE DELAY Control. (See above.)

RANGE 3-30 Control. Used with RANGE DELAY Control and RANGE DELAY Switch (See above.)

RANGE MKS (Range Marks) Control. Used to control the intensity of the range marks.

HDG MK (Heading Mark) Control. Used to control the brilliance of the heading mark; i.e., brighter or darker.

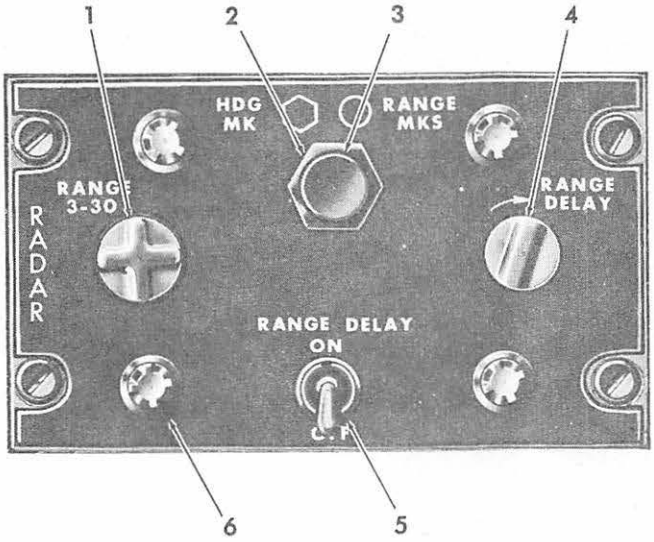

1. RANGE 3-30 CONTROL
2. HDG MK CONTROL
3. RANGE MKS CONTROL
4. RANGE DELAY CONTROL
5. RANGE DELAY SWITCH
6. PANEL LIGHT

SYNCHRONIZER CONTROL PANEL

Antenna Control Panel

The antenna control panel located at the navigator's position is energized by going to the SECTOR position with the SCAN Switch on the Radar Set Control Panel (also at the navigator's position). Once energized, the panel will give the operator variable control of the antenna.

The RELATIVE BRG Control can be used to set up a relative bearing of where you would like the antenna to be positioned for a sector scan. In other words, if you are driving along and see a target off your left wing-tip and would like to view just this area, just set RELATIVE BRG Control "L" to 90°. Then you could set your SECTOR WIDTH Control to 30°. Now you would scan a sector 15° either side of 90° left. The RELATIVE BRG Control can be set anywhere between left 180° to right 180°.

The SECTOR WIDTH Control varies the width of the sector to be scanned. The center of this sector is the relative bearing set by the RELATIVE BRG Control (see above). Sector width settings vary from 30 (15 degrees left and right of center) to 180 (90 degrees left and right of center).

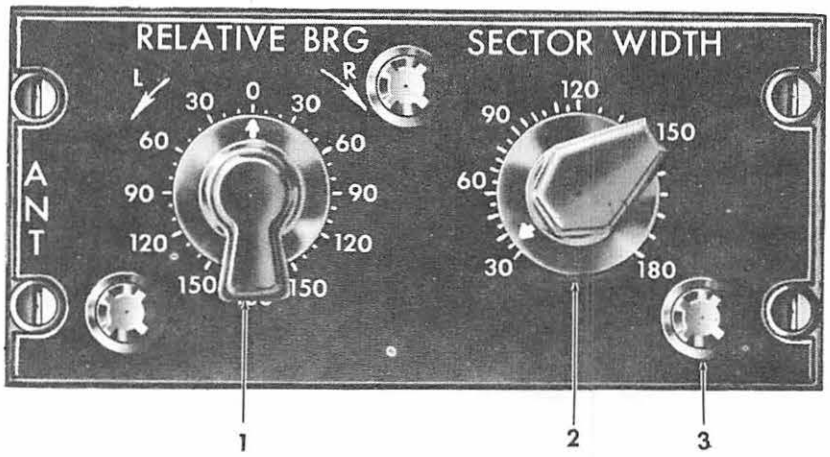

1. RELATIVE BRG CONTROL
2. SECTOR WIDTH CONTROL
3. PANEL LAMP

ANTENNA CONTROL PANEL

Radar Pressurization Panel

The radar pressurization panel is located on the navigator's panel. It is used to control pressurization of the waveguide and RT unit. An indicator enables checking of the pressurization.

The pressurization should approximate sea level pressure. This pressure will prevent arcing, which would cause poor radar operation and damage to the equipment.

CAUTION

Do not operate the AN/APN-59B radar set until the system pressure gage reads between 25 and 35 inches of mercury. Arc-over can damage system components if the system is not sufficiently pressurized. Do not exceed 41 inches of mercury or structural damage to the system may result.

A pressure indication lamp on the panel will illuminate whenever the pressurization pump operates.

To control the pressure, a three-position switch is mounted on the panel.

The switch is held in the NORMAL ON position by a guard. In NORMAL ON, pressure is maintained automatically.

In the MOMENTARY ON, pressurization is controlled manually. The pump runs as long as the switch is in this position. The switch must be held in this position as a spring will pull it to the OFF position.

The OFF position turns off the pressurization pump.

A gage on the panel indicates the pressure within the system from 15 to 45 inches of mercury.

The PUSH TO BLEED button is used to bleed pressure from the system if the pressure becomes too high.

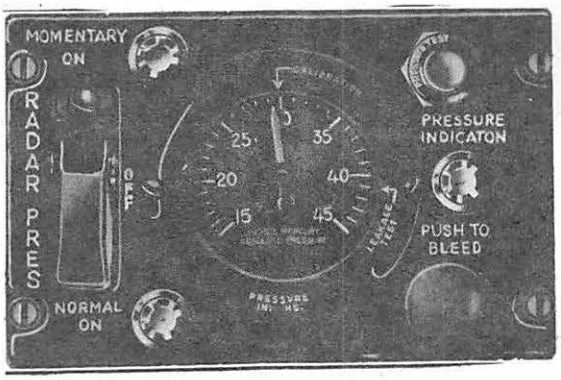

RADAR PRESSURIZATION PANEL

Chapter 7

DOPPLER RADAR AND DOPPLER COMPUTER

Doppler Radar System (AN/APN-147V)

The Doppler radar measures drift angle and ground speed. These values are provided as a direct digital readout at the navigator's position. The navigator may use track angle (heading plus or minus drift angle) and ground speed to obtain better dead reckoning accuracy. He may also extract wind information by vectorially obtaining the difference between track angle and groundspeed and heading and true airspeed. This system also supplies the track angle and raw doppler groundspeed to the AN/ASN-35 Doppler Computer and the AN/ASN-24 Navigational Computer when it is installed. The groundspeed is also supplied to the compass system to improve compass accuracy.

The system has five components: the receiver-transmitter and frequency tracker, which are installed in the center avionics equipment rack; the antenna, located on the bottom of the fuselage behind a sliding radome panel; and the control panel and indicator located at the navigator's position.

The power for operation of the doppler system is provided through the Nr 1 Avionics DC Bus and the 115 Volt Navigation AC Bus Nr 1. The system is protected by two DOP RADAR circuit breakers on the avionics circuit breaker panel.

The control panel at the navigator's station contains the switches necessary for operation. The power switch is used to energize the system for manual slewing (SLEW), and automatic operation (ON). Slewing is used to change the groundspeed and drift angle indications to values close to the actual value in order for the radar to lock on. If the slewed values are correct, the radar will automatically maintain the drift angle and groundspeed indications when the power switch is positioned to the ON position. In the SLEW position, two momentary switches are used to slew the indicator readings. The groundspeed (G/S) switch has an INCR and a DECR position,

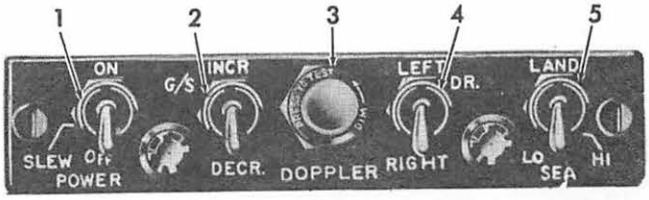

DOPPLER RADAR PANEL

1. POWER SWITCH
2. GROUND SPEED SWITCH
3. MEMORY WARNING LIGHT (2 PLACES)
4. DRIFT SWITCH
5. TERRAIN SELECTOR SWITCH
6. DRIFT ANGLE POINTER
7. PUSH PRE-TAKEOFF BUTTON
8. GROUND SPEED COUNTER
9. INDICATOR WARNING FLAG

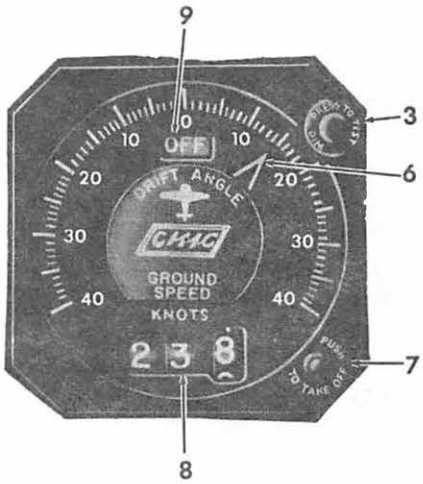

DRIFT ANGLE - GROUND SPEED INDICATOR (ID-938A)

to either increase or decrease the groundspeed indication. The drift (DR) switch has a LEFT and a RIGHT position to slew the drift indication left or right. These switches are disabled when the power switch is positioned to ON. A land-sea switch allows a selection for each type of surface over which the aircraft flies.

When the LAND position is used, the system operates in the JANUS or MEMORY mode. When flying over water the SEA-HI or SEA-LO position is used. The SEA-HI position is used when the SEA-LO does not have sufficient signal to keep the doppler out of MEMORY operation.

When the SEA-HI position is used, the system may fluctuate between three modes: JANUS, MEMORY and NON-JANUS. If the system can achieve lock-on in the JANUS mode, it will remain in this mode. But, should the signal become unusable the system will go into MEMORY and at the same time switch to the NON-JANUS mode. The system may or may not achieve lock-on in this mode; however, regardless of lock-on, the system will remain in the NON-JANUS mode for only 120 seconds. After this period of time, the system will revert to the JANUS mode and attempt to lock-on. It should be noted that this procedure may become cyclic if the system cannot lock-on in the JANUS mode.

In the SEA-LO position, the system operates only in the JANUS or MEMORY modes. However, the frequency of the oscillation is changed to compensate for the sea effect.

Insufficient signal and system reliability are indicated by a memory light on the control panel, and by an OFF flag and memory light on the indicator. The indicator displays drift angles of 38 degrees ± 2 degrees left or right, and groundspeed up to 999 knots. However, maximum drift is restricted to 30 degrees left and right by limitations in the antenna. A PUSH TO TAKEOFF button on the indicator is used to automatically slew the indicator prior to takeoff. When this button is pushed, the drift indicator will slew to 0 degrees and the groundspeed indicator slews to 165 knots.

Doppler Computer System

The AN/ASN-35 doppler computer provides computed distance-to-go on a preset course and left/right deviation from this course. Deviation is called distance cross track (cross track deviation) and is used by the autopilot and flight director in a manner similar to VOR and TACAN. The computer also provides track-angle-error (which is the angular deviation from the desired track) for use in the FDS. The doppler radar, AN/APN-147V, feeds track angle (heading plus or minus drift) and groundspeed data into the computer system. When a magnetic heading reference is used, the desired track angle is a rhumb line course; when a gyro heading reference is used, the desired track angle is a great circle course. The C-12 compass provides this heading reference (magnetic or gyro) for the computer.

Power for the system is provided through three circuit breakers on the avionics circuit breaker panel at the navigator's position. The AC Avionics Bus Nr 1 supplies 115 volts AC, the DC Avionics Bus Nr 1 supplies the 28 volts DC, and the AC Navigation Bus Nr 1 supplies the 26 volts AC. An ASN-24/ASN-35 ground test switch for ground checkout of the system is located on the navigator's control panel.

The computer is located in the center avionics equipment rack. The control-indicator is installed either on the center console or on the navigator's control panel. The auxiliary cross track indicator is on the navigator's control panel.

The control indicator and auxiliary cross track indicator contains the system operating controls. The two-stage control indicator contains an OFF-MAN-AUTO function switch which is used to energize the system. In the MAN (manual) position, the stages must be changed manually at the end of each leg of flight. In the AUTO (automatic) position, the changeover from one stage to the other is automatic. A stage selector lever determines which of the two stages is being used. The lever can be positioned to either Stage I or Stage II. Only one stage can be active at a given time. DESIRED TRACK ANGLE controls are provided for each stage. These controls allow selection of the desired track, in degrees. The desired DISTANCE TO GO for each stage is also selected. The selected track angle and distance is displayed in windows adjacent to the controls. A DISTANCE CROSS TRACK window and control allows selection and display of cross track deviation, in nautical miles, for the active stage. A power failure light on the panel goes ON if the internal power source of the system fails.

NAVIGATOR'S AUXILIARY CROSSTRACK INDICATOR

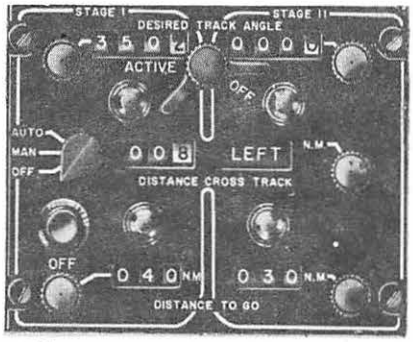

PILOT'S CONTROL INDICATOR

The auxiliary cross track indicator contains a counter and mode selector switch. The switch controls the operation of the auxiliary DISTANCE CROSS TRACK and the main DISTANCE CROSS TRACK counters. Normally, the mode selector is placed in the AUXILIARY OFF MAIN CROSS TRACK ACTIVE position so that the main counter is used with the active stage.

The distance scale switch on the auxiliary panel controls the maximum distance readouts presented for DISTANCE CROSS TRACK and DISTANCE TO GO. When the distance scale switch is placed to the NAV position, the DISTANCE CROSS TRACK readout (deviation left or right of desired track) will be a maximum of 99.9 NM and the maximum distance to go for each stage will be 999 NM. In the DROP position (expanded times 10), the scales are reduced ten times, i.e., 9.99 and 99.9 nautical miles.

The GROUND TEST ASN-24/ASN-35 switch has two positions, NORMAL and TEST, and should be in the NORMAL position for all inflight operations. The TEST position bypasses the touchdown relay switch and is used for ground checkout of the equipment.

ASN-24/ASN-35 GROUND TEST SWITCH

Chapter 8

NAVIGATIONAL AIDS

51Z-3 Marker Beacon Receiver

The marker beacon receiver provides visual and aural indications when the aircraft passes over a marker beacon transmitting station.

The visual indication is the illumination of one of the group of three indicator lights marked AOI located on both the pilot's and copilot's instrument panel. The aural signals are received through the interphone system.

Marker beacon transmitters are located along the air routes and along the approach to the runways. These stations transmit a 75 MHz tone modulated signal. The frequency of the modulation depends upon the location of the transmitters. Airway marker beacon transmitters are modulated by a 3000 hertz tone. The information supplied by this type is used as a navigational aid during cross-country flights. Transmitters located at the outer marker of a runway approach are modulated by a 400 hertz tone. A 1300 hertz tone is used to modulate transmitters used as the middle marker of a runway approach. The information supplied by these types of transmitters are used for instrument landing systems (ILS) reference points.

As the aircraft flies over one of the marker beacon transmitters, the signal is picked up by the receiver, which supplies two output signals, a DC signal to the pilot's and copilot's indicator light, and an audio signal to the interphone system.

A white light identified by the letter "A" will illuminate when an airway marker signal is received; the blue light identified by the letter "O" will illuminate when an outer marker signal is received; and the amber light identified by the letter "I" will illuminate when a middle marker signal is received.

The only operating control is the marker beacon HIGH-LOW switch on the pilot's instrument panel. The HIGH position is used when receiving weak signals, and the LOW position is used for strong signal reception. Selecting the LOW position narrows the apparent width of the marker beacon transmission.

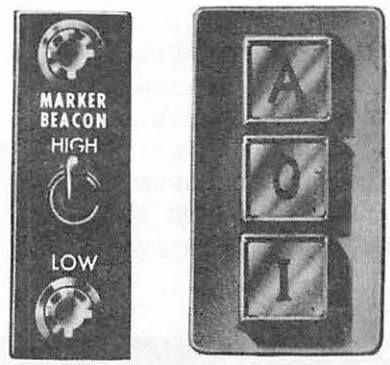

O
M
I

Power for system operation is 28 volts DC. The DC power is supplied from the Avionics DC Bus Nr 1. There is no power switch for the system, therefore, the system is on any time power is applied to the Avionics DC Bus Nr 1. The system is protected by a circuit breaker on the avionics circuit breaker panel.

The components for the marker beacon system consist of a receiver, two indicator light assemblies, a sensitivity switch, and an antenna. The receiver is located on the center avionic equipment rack and the antenna is mounted on the bottom of the left wheel well fairing.

Bearing-Distance-Heading Indicators

Introduction

The Bearing-Distance-Heading Indicators (BDHI) and BDHI selector panels are installed to provide heading information from the compass systems and to display bearings (relative and magnetic) and distance to selected ground stations - low frequency, VOR, and TACAN. Distance information is available only when using a TACAN beacon.

Operation

The pilot, copilot, and navigator have BDHIs installed at their positions. The BDHI selector panels determine the navigation aid connected to the needles of the BDHI. The navigator's installation is different from the pilot's and copilot's in that he has two BDHIs instead of one.

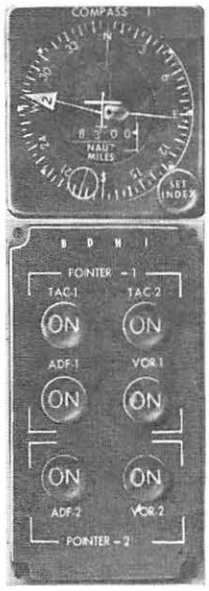

BDHI

BDHI SELECTOR PANEL

TYPICAL-PILOT'S AND COPILOT'S INSTRUMENT PANEL

On the pilot's or copilot's selector panels, four mechanically interlocked buttons are used to select either TAC-1, TAC-2, ADF-1, or VOR-1 for display on the Nr 1 needle. Two mechanically interlocked buttons are used in the same manner to select ADF-2 or VOR-2 for display on the Nr 2 needle.

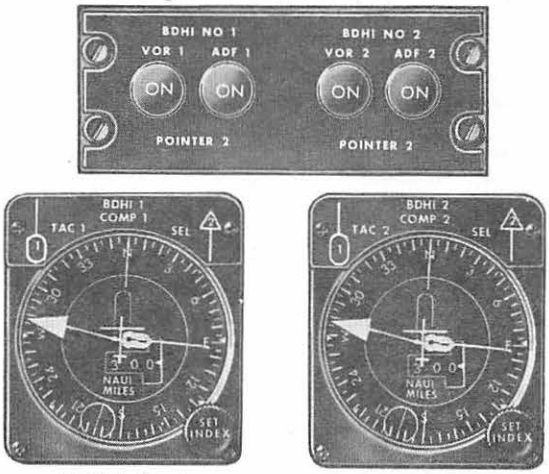

BDHI NO. 1 BDHI NO. 2

NAVIGATOR'S BDHI DISPLAY

#1 needle is always TACAN

On the navigator's selector panel, only four buttons are used for navigational aid selection, and these are mechanically interlocked in pairs. TAC-1 is always connected to the Nr 1 needle on the Nr 1 BDHI, and TAC-2 is always connected to the Nr 1 needle on the Nr 2 BDHI. Thus, only the Nr 2 needles on each BDHI can be switched between different navigational aids. On the Nr 1 BDHI, either VOR-1 or ADF-1 can be selected for display on the Nr 2 needle, and on the Nr 2 BDHI, VOR-2 or ADF-2 can be selected for display.

In addition to the two needles and the rotating compass card, the indicators have a compass warning flag, an index marker, and an index set knob. The warning flag will be displayed any time the voltage is not sufficient for normal compass operation. The index set knob is used to position the index marker at any position on the compass card. Once set, the marker rotates with the card, as the aircraft's heading changes.

Power Supplies

The pilot's BDHI and the navigator's Nr 2 BDHI receive power from the Nr 2 Avionics DC Bus and the Nr 2 AC Navigation Bus. The copilot's BDHI and the navigator's Nr 1 BDHI receive power from the Nr 1 Avionics DC Bus and the Nr 1 AC Navigation Bus.

Compass Failure

Heading information for the pilot's BDHI compass card comes from the Nr 2 C-12 compass system, while the copilot's compass card receives its information from the Nr 1 compass system. Inasmuch as the VOR and TAC Nr 1 systems receive heading information from the Nr 1 compass system and the VOR and TAC Nr 2 systems receive their heading information from the Nr 2 compass system, a compass failure could become quite confusing --- especially if an emergency was in progress.

The following chart illustrates the possible different indications, resulting from a compass failure of either the Nr 1 or Nr 2 compass systems.

In this chart, the following symbols are used:

RB = Relative Bearing
MB = Magnetic Bearing
Normal = Both Relative and Magnetic Bearings

Nr 1 Compass Failure

Pilot's	System	Copilot's
Normal	Card	Frozen
Not Usable	VOR-1	MB
Not Usable	TAC-1	MB
Normal	ADF-1	RB
Normal	VOR-2	RB
Normal	TAC-2	RB
Normal	ADF-2	RB

Nr 2 Compass Failure

Pilot's	System	Copilot's
Frozen	Card	Normal
RB	VOR-1	Normal
RB	TAC-1	Normal
RB	ADF-1	Normal
MB	VOR-2	Not Usable
MB	TAC-2	Not Usable
RB	ADF-2	Normal

Compass Failure Block Diagram

To illustrate the reasons for the disparity in indications as presented by the above charts, a block diagram is presented on Page 6-49.

CONDITIONS

1. Compass Nr 1 has failed on a heading of 270 degrees. Actual heading, as reflected on the Nr 2 compass system, is 360 degrees.

2. All four VOR and TACAN systems are tuned to the same station, and the aircraft is on the 090 degree radial.

3. Pilot has selected TAC-1 on the Nr 1 needle, and VOR-2 on the Nr 2 needle.

4. The copilot has selected TAC-1 on the Nr 1 needle and VOR-2 on the Nr 2 needle.

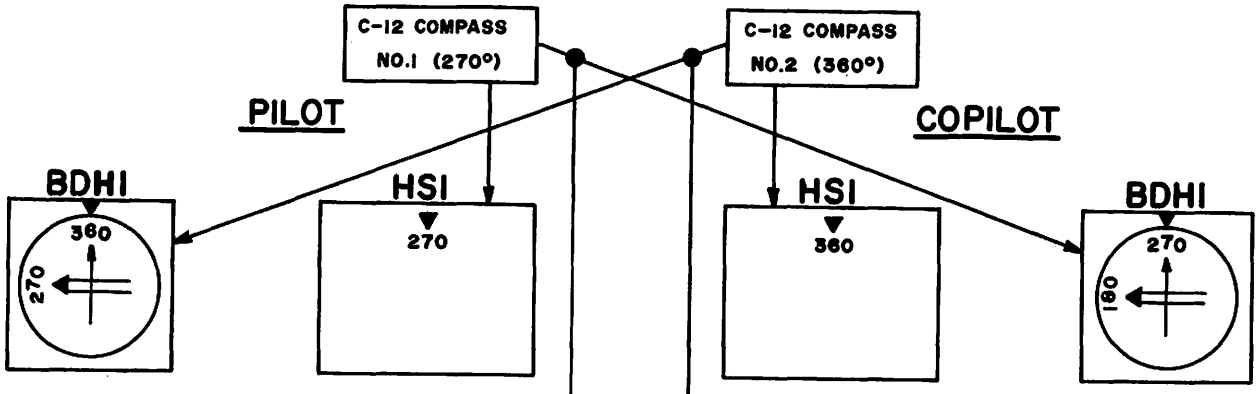

Since the aircraft is on the 090 radial, the bearing to the station is 270. However, the Nr 1 systems "sees" the aircraft heading as 270; therefore the synchros position the needles to the top of the indicators.

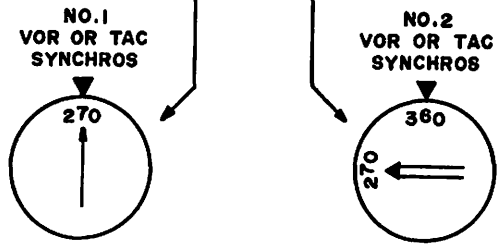

Aircraft is still on the 090 radial, thus the bearing is 270, but since the aircraft heading is 360, the Nr 2 systems "sees" the correct bearing as being 90 from the top of the indicator.

CONCLUSION

Pilot's BDHI

Bearings from the Nr 1 VOR or TAC systems will not be usable since the needle is being positioned relative to the frozen Nr 1 compass card.

Bearings from the Nr 2 VOR or TAC systems will be normal, i.e., both magnetic and relative bearings are provided, since the Nr 2 compass and navigational aids are normal.

Copilot's BDHI

Bearings from the Nr 1 VOR or TAC systems will be magnetic because these synchros and the compass card are receiving the same heading information, similar to the single compass systems typical of older aircraft installations.

Bearings from the Nr 2 VOR or TAC systems will be relative because the needles are positioned relative to the operative compass system, but the magnetic bearing of 180 is in error.

ADF-73, Radio Compass System

The Automatic Direction Finder system provides reception from ground radio beacon stations, radio range stations, weather stations, and broadcast stations in the frequency range of 190 to 1750 KH_Z. The ADF is used for automatic or manual direction finding. The relative and magnetic bearing to the selected ground station is displayed on the bearing-distance-heading indicator (BDHI) at the pilot's, copilot's, and navigator's positions. Bearing information may be used to direct the aircraft to a station (homing), or to provide a fix on the aircraft position. Audio signals from the ADF receiver identify the radio station and provide weather reports and other flight information through the interphone and public address systems.

Two complete and independent automatic direction finder (ADF) systems are installed. These radio compass systems are designated as the ADF Nr 1 and ADF Nr 2.

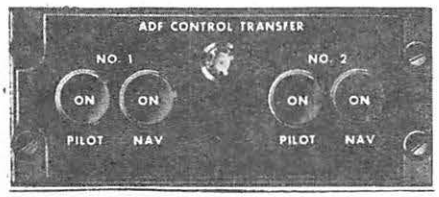

ADF CONTROL TRANSFER PANEL

The receivers are located on the center avionics equipment rack. Each system has one control panel on the center console and another at the navigator's position. The sense antennas are on the top of the fuselage between the wings, while the loop antennas are located on the bottom of the fuselage. An ADF control transfer switch panel, on the center console, determines which of the control panels is operational.

The control panels provide the operating controls, frequency indication, and tuning indications.

A function selector switch on the control panel is used to energize the system and to select the type of operation. In the ADF position, the system uses the sense and loop antenna signals to provide directional information. The bearing of the station to which the receiver is tuned is displayed on the BDHIs.

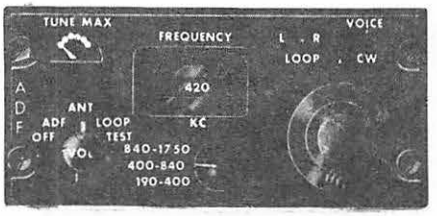

ADF CONTROL PANEL

In the ANT position the system does not provide directional information but functions as an ordinary radio receiver and is used primarily for radio broadcast reception. Only the sense antenna is used when the ANT position is selected.

The LOOP position provides manual direction finding. The loop antenna is positioned by the loop L-R switch and can be positioned to obtain a maximum signal or a null. Caution should be exercised in obtaining the correct null, since the loop function will show two nulls during a 360 degree rotation. The aircraft bearing to the station is displayed on the BDHI. This manual feature may be used during periods of extreme interference. The loop L-R switch is operational in the following modes of operation, i.e., ADF and LOOP positions.

The TEST position provides a means of self-test for the system. Two functions can be checked; frequency calibration and the homing ability of the receiver.

To check frequency calibration, the switch is held in the spring loaded TEST position and a test frequency is

selected, in turn, on each of the three bands. The test frequencies are 285, and 570, KHz. Above each frequency is a calibration mark. A tone will be heard, and by tuning across the test frequency, an aural-null (zero beat) should be achieved. If this null is within the limits of the calibration marks above the test frequency, the receiver is properly calibrated.

To check the homing ability of the receiver, the switch is again held in the spring loaded TEST position, and the ADF button on the BDHI selector panel is depressed. The receiver may then be tuned from one end of the band to the other. As a result, the appropriate pointer on the BDHI should display a reading of 180 (± 5) degrees from the nose of the aircraft (except at the three test frequencies).

The rotary band selector on the panel is a three position (190-400, 400-840, 840-1750 KHz) switch that determines the frequency band selection of the receiver. It also positions a shutter in the frequency indicator window to display the appropriate frequency markings.

The receiver frequency is marked on a black lighted tape viewed through the indicator window. The tune dial positions the tape under the index marked on the window and tunes in the selected station. Exact station tuning is indicated by maximum needle deflection of the TUNE MAX indicator needle.

A volume control, which is concentric with the function selector switch, varies the audio signal level of the receiver.

A VOICE-CW switch allows selection of the type of transmitter modulation the receiver will detect. Voice signals are received in the VOICE position. Interrupted carrier (Morse Code) signals are unmodulated carrier signals and are received in the CW position.

Power necessary for system operation is 26 volt AC power and 28 volt DC power. The Nr 1 system is supplied power from the AC Navigation Bus Nr 1, and the DC Avionics Bus Nr 1. The Nr 2 system power is supplied from the AC Navigation Bus Nr 2, and the DC Avionics Bus Nr 2. The systems are protected by circuit breakers on the avionics circuit breaker panel.

VHF Navigation System

Two separate and identical VHF radio navigation systems are used to receive VHF OMNI-range information. This information is supplied to indicators for use as a navigational aid during cross-country flying. One of two types may be installed: the Collins 51R6 or the Wilcox 806A. The systems are also used during an instrument approach to receive localizer information. This information is presented on an indicator to provide lateral guidance information as part of the instrument landing system (ILS). The VOR/ILS signals are also used as autopilot and flight director system inputs to direct the flight of the aircraft.

The systems are identified as the VHF navigation system Nr 1 and Nr 2. The power for system Nr 1 is supplied from the Isolated DC Avionics Bus and the Isolated 26 Volt AC Avionics Bus through two VHF NAV Nr 1 circuit breakers on the avionics circuit breaker panel. Power for the Nr 2 system is supplied from the DC Avionics Bus Nr 2 and the 26 Volt AC Navigation Bus Nr 2 through circuit breakers on the avionics circuit breaker panel.

Each system consists of a receiver, control panel, and antenna. The antenna located on the vertical stabilizer is "T"-connected to both systems.

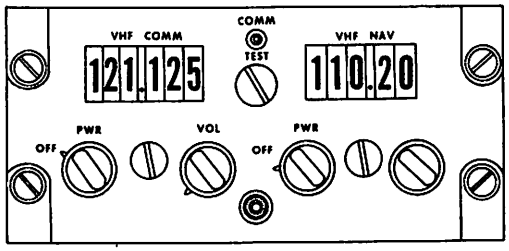

PILOTS AND COPILOTS RECEIVER CONTROLS (TWO)

The receivers are installed in the center equipment underdeck rack. The controls, located on the center console, are part of the dual VHF communications/VHF navigation control panels.

Frequency selection and system operation is made from the VHF NAV section of the VHF control panel. The frequency range is 108.00 through 117.95 MHz, and frequencies are selected in graduated 100 KH_Z steps; however, the receiver is designed to tune channels in the 50 KH_Z step, but aircraft wiring prevents this. Therefore, when a 50 KH_Z frequency is selected (i.e., 108.05, 108.15, etc.) the receiver tunes to the next lower channel.

The system is turned on and the frequency selected with two rotary control knobs located below the digital counter window on each control panel. Each control knob is a dual concentric control. The outer knob on the left control is a combination power ON/OFF switch and volume control. The inner control knob on each of the controls selects the receiver frequency and visually displays the selected frequency on the counters above the control. The frequency selected determines whether VOR or LOC signals are received. Selection of a frequency within the LOC band of 108.10 to 111.90 MH_Z; odd tenths of each megahertz, i.e., 108.1, 108.3, 108.5, etc., (the even tenth channels are used as VOR frequencies) automatically selects and tunes a paired glide slope frequency in the glide slope receiver. Selection of a VHF frequency other than one used for LOC operation places the glide slope receiver in standby operation.

LOCALIZER FREQUENCY	GLIDESLOPE FREQUENCY
108.1	334.7
.3	334.1
.5	329.9
.7	330.5
.9	329.3
109.1	331.4
.3	332.0
.5	332.6
.7	333.2
.9	333.8
110.1	334.4
.3	335.0
.5	329.6
.7	330.2
.9	330.8
111.1	331.7
.3	332.3
.5	332.9
.7	333.5
.9	331.1

The use of the VHF navigation system signals by the BDHI system or the FDS computer is determined by the position of selector switches in each of the two systems.

TACAN AN/ARN-21C

There are two independent TACAN navigation systems in the C-141. These systems are used as navigational aids to determine the bearing and distance to a selected TACAN surface beacon. Continuous bearing and distance of the aircraft to any beacon station within a line-of-sight distance of 195 nautical miles may be obtained from the indicators.

TACAN

Power necessary for system operation is 28 volts DC and 115 volts AC. The Nr 1 system receives power from the DC Avionics Bus Nr 1 and from the 115 Volt AC Navigation Bus Nr 1. The Nr 2 system receives its power from the DC Avionics Bus Nr 2 and from the 115 Volt AC Navigation Bus Nr 2. Both systems are protected by circuit breakers on the avionics circuit breaker panel.

Antennas for both systems are located on the top and bottom of the fuselage. The R/T units are both located in the left avionics equipment rack.

Two identical remote controls are on the center console. The remote control on the left side of the console is for the Nr 1 TACAN system and the control on the right is for the Nr 2 system. All controls necessary for system operation are on the remote control. The function selector switch is used to energize the system and to select the mode of operation. The channel selector allows selection of any channel from 01 through 126.

NOTE: No attempt should be made to set the channel selector below channel 01 or above channel 126. The volume control will vary the audio output of the receiver to the interphone system.

Two modes of operation are possible: REC and T/R. When the REC (receive) mode is selected, the receiver circuits are energized and the system provides bearing (radial) information to the flight director(s) and BDHIs. However, when the T/R (transmit and receive) mode is employed, the receiver-transmitter is fully operational and both bearing and distance information is available.

NOTE: When the equipment is turned ON, there is a normal delay of approximately 90 seconds. There is no delay when going from REC to T/R.

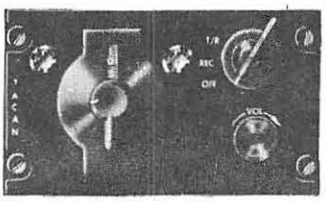

TACAN CONTROL PANEL

C-141 AIRCRAFT PERFORMANCE

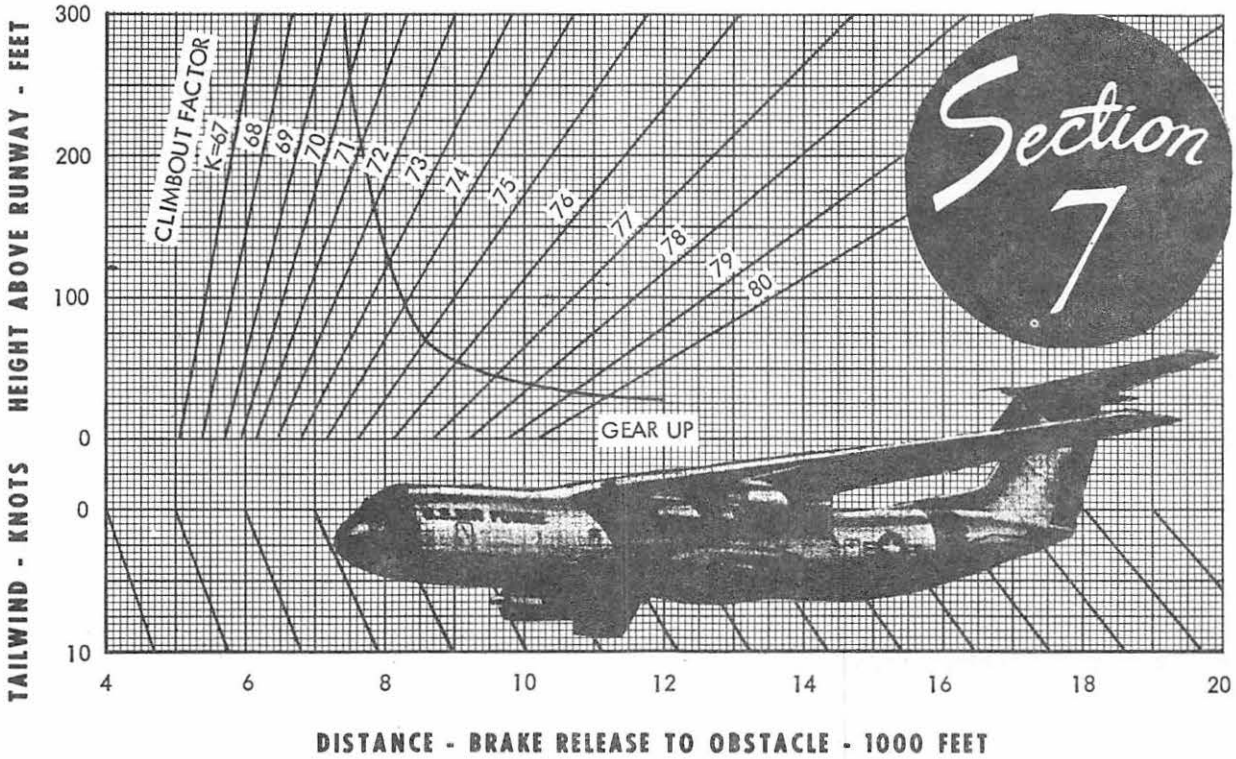

TABLE OF CONTENTS

Chapter 1

THE ATMOSPHERE AND ITS EFFECT ON THE AIRCRAFT

Introduction

The performance of the aircraft depends upon the pressure altitude and the temperature of the air through which it is flying, whether it be climbing, cruising or descending.

To provide a convenient reference, the International Civil Aviation Organization (ICAO) has established a set of values for temperature, density and pressure in the atmosphere. This, then, defines the standard atmosphere, or just STANDARD AIR. These values are given in T.O. 1C-141A-1-1.

Altitude

Pilots are concerned with three different types of altitudes: true altitude, pressure altitude, and density altitude. However, on the C-141, we are primarily concerned with pressure altitude, since this is the altitude presented in the charts.

In actual air at a given true altitude the pressure may depart considerably from standard air values. If the atmospheric pressure is measured at the aircraft level, an altitude corresponding to this pressure can be determined from a standard air table.

This altitude is known as the pressure altitude of the aircraft. It is also the altitude recorded by the altimeter if the altimeter has no instrument error and is set to 29.92 inches of mercury.

It will read higher or lower than the true altitude in a non-standard atmosphere.

Most of the charts are based on pressure altitude and are so titled. Some data is presented for standard conditions, and in these cases the altitude scales are merely titled ALTITUDE. For these charts use pressure altitude.

Temperature

Whenever the C-141 is flying, the indicated value of OAT is in error. This error is caused by the compressibility effect of air in motion over the temperature sensor. The result is that the total temperature (IOAT) is hotter than the actual OAT.

Gage readings (total temperature, T_t) must be corrected to obtain the true temperature. A chart presents indicated OAT versus true OAT to correct for the temperature rise due to the ram effect. Temperatures presented in T.O. 1C-141A-1-1 are true OAT or as indicated on the chart.

Airspeeds

Airspeeds are shown as calibrated airspeed, true airspeed or true Mach number.

Mechanical error in the instrument and pitot-static position error are corrected by the CADC, so indicated airspeed is calibrated airspeed.

Compressibility error and density error are corrected by the CADC to indicate true airspeed.

Charts provide a conversion between true Mach number and calibrated airspeed and true airspeed. One chart provides a conversion between true Mach number and calibrated airspeed.

Two charts are available to convert true Mach to true airspeed. One is for mission planning under standard day conditions. The other is for use when the temperature is obtained from the aircraft in flight.

Chapter 2

ENGINE DATA

Introduction

The basic general principle of power plant operation remains the same for all turbojet engines. The C-141 has a TF-33-P-7 flat-rated, forward-fan-type engine. The primary purpose of the flat-rated engine is to provide constant thrust over a wide ambient temperature range. Below 15°C, the installed engine operating at sea level develops 20,250 pounds of static thrust. Above 15°C, thrust decreases with increasing temperatures. The basic mathematical formulas used to determine power output are presented in this review.

Thrust

Thrust is commonly defined as a push with force. When the term is applied to aircraft, thrust can be either a push or pull. For example, propellers are thought of as pulling an aircraft, but jet engines are considered to be pushing the aircraft. In either case, thrust is the driving force that propels the aircraft and is produced by accelerating a mass flow of air.

The propeller of propeller driven aircraft pulls an aircraft through the air by using the air itself as a material for the propeller to work against. While the rotating propeller is doing work on the air; the air, which is free to move, moves in the opposite direction from that of the aircraft. The energy which goes into moving the air is wasted energy in a sense; but while the air is accelerating, it serves as a footing or foundation against which the propeller can push. Thus, in giving this rearward push to the air, the propeller itself pulls the aircraft (Newton's Third Law).

The jet engine also pushes against something to develop its thrust, but it does this inside the engine itself. Energy in the jet engine is supplied in the form of heat. When a gas is heated in a closed container, the gas molecules move more rapidly and with greater force against each other and the sides of the container, which results in an increase in pressure. If an opening is made in the container, the gas will accelerate through the opening and try to move the container in the opposite direction. This is action that takes place in jet and rocket engines. In the jet engine for example, the gases accelerate from their inlet velocity to thousands of feet per second. As the gases accelerate rearward through the jet nozzle (exhaust), a forward-direction reaction is produced inside the engine, which propels the engine in a direction opposite to the rapidly escaping gases.

Thrust Computation

To further understand the reaction principle, it is desirable that you understand the basic formulas for computing gross thrust, net thrust, and thrust horsepower. To do this, you need to know the effect of gravity on an object or mass. A falling object will accelerate in accordance with the law of gravity at an average rate of 32.17 feet per second per second until it reaches its terminal velocity or strikes the earth, whichever occurs first.

The acceleration rate of 32.17 feet per second per second (32.17 ft/sec^2) is an average rate because the actual value varies from a maximum of 32.258 at the poles to a minimum of 32.088 at the equator. The terminal velocity is determined by the resistance offered by the atmosphere to a falling object. When the resistance (drag) equals the force of gravity, the object ceases to accelerate.

Since 32.17 feet per second per second is a constant acceleration, it is used to determine the amount of resistance an object of given weight offers to motion. This is accomplished by dividing the weight by the acceleration constant. This quotient is called the mass of the object. This is Newton's second law of motion and can be expressed by the following formula:

Force of the action

equals

$$\frac{\text{weight}}{32.17\ \text{ft/sec}^2}$$

times

The change in velocity in ft/sec^2 (acceleration) imparted to the mass (V_c).

This formula can also be written:

$$\text{Action} = \frac{W}{g} \times V_c$$

Since every action produces an equal and opposite reaction, and using the letter "a" for acceleration the formula becomes:

$$\text{Gross thrust (reaction)} = \frac{W}{g} \times a$$

Let us use the above formula in an example. To find the force necessary to accelerate an object weighing 100 pounds at a rate of 5.0 feet per second per second, we substitute these numbers in the thrust formula:

$$\text{Gross thrust} = \frac{W}{g} \times a$$

$$\text{Gross thrust} = \frac{100}{32.17} \times 5$$

$$\text{Gross thrust} = 15.50 \text{ pounds}$$

By increasing the weight of the object and decreasing the rate of acceleration a proportionate amount, the thrust can be made to remain the same.

Now let us apply these formulas to the jet engine. One of the larger jet engines handles air at the rate of 180 pounds per second. To determine the gross thrust of this engine the thrust formula is applied:

$$\text{Gross thrust} = \frac{W}{g} \times a$$

Substitute for W and g,

$$\text{Gross thrust} = \frac{180}{32.17} \times a$$

$$\text{Gross thrust} = 5.59 \times a$$

The nozzle velocity of the air in this jet engine is approximately 2,055 feet per second at full throttle. Assuming the engine and aircraft are stationary, the air has been accelerated to this value. Including this value in the computation for thrust we have:

Gross thrust = 5.59 x 2,055 or 11,487 pounds of thrust.

The gross thrust formula does not take into consideration the forward speed of an aircraft. For this situation we want the net thrust. If the velocity of the aircraft is 400 miles per hour, the velocity of the aircraft must be subtracted from the velocity of the exhaust gases at the jet nozzle to determine the actual velocity change caused by the engine. This assumes that the air entering the jet engine is also traveling as fast as the aircraft. This can be expressed as an equation:

$$V_j - V_p = V_c$$

In the equation V_j is the velocity of air leaving the jet nozzle, V_p is the velocity of the aircraft (or air entering engine), and V_c is the actual velocity change. The net thrust formula becomes:

$$\text{Net thrust} = \frac{W}{g}(V_j - V_p)$$

Keep in mind that when gross thrust is computed, the velocity of the air coming into the engine is disregarded and the velocity of the gas leaving the engine is used as the acceleration factor. True acceleration of the gas is the difference in velocity between the incoming and outgoing air, and this difference is used in computing net thrust.

The equivalent thrust horsepower (thp) of a jet engine can be calculated by measuring how fast the jet engine is doing work. Power is a force applied through a distance in a given period of time. Therefore, the equivalent thrust horsepower which a jet engine is producing depends on the thrust developed multiplied by the distance the engine has moved in a given period of time. To determine the horsepower of the jet engine, the following formula is used:

Thrust in hp

equals

$$\frac{\frac{W}{g}(V_j - V_p) \times \text{velocity of aircraft in ft/sec}}{550 \text{ foot-pounds per second}}$$

In this formula, one horsepower, 33,000 foot-pounds per minute, has been reduced to foot-pounds per second by dividing by 60. Since the velocity changes in the air and the aircraft speeds are expressed in units per second, the following equation results:

$$\text{thp} = \frac{\text{net thrust} \times V_p}{550}$$

For example, let us assume 4,000 pounds of thrust and an aircraft velocity of 375 miles per hour.

375 mph = 1,980,000 ft/hr
1,980,000 ÷ 60 = 33,000 ft/min
33,000 ÷ 60 = 550 ft/sec

Substituting:

$$\text{thp} = \frac{4{,}000 \times 550}{550} = 4{,}000$$

Thus, 4,000 horsepower is developed by a jet engine delivering 4,000 pounds of thrust at an aircraft speed of 375 mph. From this you can see that each pound of thrust will be converted to the equivalent of one horsepower at 375 mph. What would be the result on thp if the aircraft speed were increased to 750 mph?

If 750 mph equals 1,110 feet per second,

$$\text{thp} = \frac{4{,}000 \times 1100}{550} = 8{,}000$$

It should be evident from these formulas that the thrust horsepower of the jet engine is dependent upon the speed of the aircraft, and that no thrust horsepower is developed when no forward motion exists. This, however, does not mean that the jet engine has no power until the aircraft is moving. The thrust of the stationary jet engine, called "static thrust," may be measured by allowing the engine to pull on a spring scale, or through the use of proving rings or a hydraulic thrust-measuring device.

Engine Pressure Ratio

While the C-141 uses the same principles explained above to measure thrust we do have a slight change. The EPR (engine pressure ratio) indicators on the instrument panels give us a readily useable indication of engine thrust.

The EPR indicator shows the ratio of engine turbine exit (exhaust) total pressure to compressor inlet total pressure (a variation of V_j-V_p = V_c using pressure instead of velocity) which is used as a measure of engine thrust. The engine exhaust and inlet total pressures are compared by a transducer which electrically transmits an indication to the EPR indicator that is calibrated from 1.0 to 2.3. The EPR settings for various conditions of takeoff, climb, and cruise may be obtained from the appropriate charts in T.O. 1C-141A-1-1.

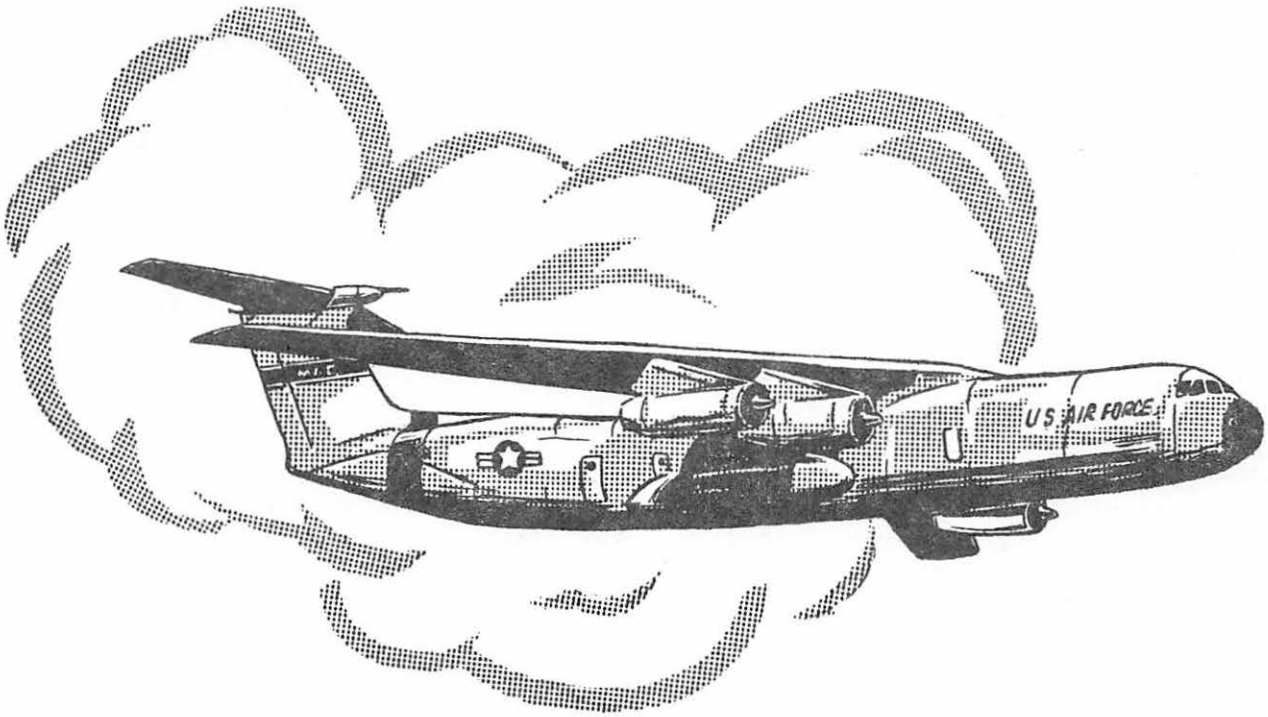

Chapter 3

AIRCRAFT PERFORMANCE LOG

Introduction

During actual operation of an aircraft, many conditions will cause the actual performance to vary from the charted and predicted value. The resulting performance may affect speed, power, weight and fuel computations. Therefore, from the standpoint of safety and efficiency, it is necessary to know what variations exist for any aircraft flown.

MAC Form 52 is provided as a simple method of recording aircraft performance data. It is adequate for normal MAC requirements. When additional information is required for identifying trends in engine failure or for any special test program, the directing headquarters will furnish necessary forms and instructions. The MAC Form 52 will be completed on all flights in excess of 4 hours with two exceptions.

1. When the total flight is on airways and in excess of four hours, the log will be utilized to record fuel used and fuel remaining.

2. Local transition flights.

Instructions

Blocks are identified by a number. Blocks identified by a symbol representing an aircraft type (jet, turboprop, recip) normally apply to that type only. The following symbols apply to various types of aircraft:

(J) - Jet powered aircraft.

(T) - Turboprop powered aircraft.

(R) - Reciprocating engine powered aircraft.

Those block numbers not specified as applying to one or more of the types, as noted after the number by a symbol, will apply to all aircraft.

Form Heading

Entries are self-explanatory.

Block 1

ENGINE START: Enter time (GMT) last engine was started.

Block 2

Not used on C-141.

Block 3

COND: Enter symbol depicting the flight condition, as follows:

a. WU/TAX/TO - Warmup, taxiing and takeoff.

b. 1↗ - CLIMB; number indicates sequence of climb in the flight profile. Climb readings will be taken at 2/3 pressure altitude. Subsequent to the initial climb, climbs of 4000 feet, such as step climbs, or less will not be recorded separately but will be included in the preceding cruise increment. (See Block 5 NOTE for maximum length of cruise.)

c. 1→ - CRUISE; number indicates sequence of cruise in the flight profile.

d. 1↘ - DESCENT; number indicates sequence of descent in the flight profile. Descents of 4000 feet or less will not be recorded separately, but will be included in the preceding cruise increment. When descent exceeds 4000 feet, Blocks 7 through 15 need not be accomplished.

e. LT - LANDING and TAXI; includes landing and taxiing condition to engine shut down.

Block 4
END: Enter GMT time for end of condition.

Block 5
SET: Enter increment time duration for the condition. For WU/TAX/TO condition all warmup and taxi time will be entered in the circle of the SET block. Takeoff time will be entered in the total time block. Takeoff time is computed from initial application of power to the first reduction of power.
NOTE: Cruise entries normally will be of not more than one-hour duration. However, the cruise immediately prior to enroute or step climb and/or the last cruise prior to descent may be extended to a maximum of one hour and thirty minutes.

Block 6
TOTAL: Enter accumulative total of SET time including takeoff, land and taxi time, but excluding encircled time for warmup and taxi.

Block 7
OATI: Enter indicated outside air temperature reading.

Block 8
OATC: Enter corrected outside air temperature as determined from the appropriate flight manual.

Block 9
VAR: Enter temperature variation from standard ICAO temperature, in plus or minus values.

Block 10
HP/HD/HO: HP - Enter the pressure altitude for the condition with altimeter set at 29.92" Hg.
HD/HO - Enter the optimum altitude for the condition (400 FPM performance ceiling).

Block 11
IAS/EAS: Enter average indicated airspeed.

Block 12
Not used on C-141.

Block 13
TASK/IMACH: Enter indicated Mach number.

Block 14
POWER: Enter engine pressure ratio (EPR).

Block 15
OIL QUAN-EGT/TIT: Enter EGT.

Block 16
ENGINE INST F/F LBS/HR: Enter fuel flow instrument readings for individual engines.

Block 17
TOTAL: Enter total of engine fuel flow instrument readings.

Block 18
FUEL USED PERIOD:

1. WU/TAX - 100 lbs/min.

2. Takeoff - 800 lbs/min.

3. Climb - Primary Method - When constant climb is maintained to cruise altitude use fuel flow readings taken at 2/3 climb altitude.
   Secondary Method - Enter the difference between the totalizer fuel quantity gage readings at the beginning and end of climb.

AIRCRAFT PERFORMANCE LOG

AIRCRAFT NUMBER	AIRCRAFT T/M/S	AIRCRAFT COMMANDER	FLIGHT ENGINEER	FLIGHT ENGINEER
DATE Z	**TO**	**FROM**	**MISSION NUMBER**	**WING/SQUADRON**

1. ENGINE START Z			2. (R) STATIC MAP (T) OIL QTY				16. ENGINE INST F/F LBS/HR	FUEL USED	FUEL REMAINING		27. FUEL USED
			1	2	3	4			CALC	GAGE	28. Δ GR WT
											29. END GR WT
3. COND	5. SET	7. OATI	9. VAR	11. IAS/EAS	13. TASK/ IMACH	15. OIL QUAN	1	18. PERIOD	21. PERIOD	24. PERIOD	30.
			10. HP				2				
4. END	6. TOTAL	8. OATC	HD/HO	12. $\sqrt{\theta}$	14. POWER	EGT/ TIT	3	19. EXTRA	22. TOTAL	25. TOTAL	31.
							4	20. TOTAL	23.	26.	32.
WU/ TAX T.O.	○						17. TOTAL				

33. REMARKS	34. WEIGHT AND BALANCE DATA						
	OPERATING WEIGHT						
	FUEL *(Ramp)*						
	WATER						
	CARGO						
	TOTAL ACFT WT *(Ramp)*						

MATS FORM APR 65 **52** PREVIOUS EDITIONS OF THIS FORM ARE OBSOLETE

4. Cruise - Enter total fuel used by the engines for the period as computed using the total of the fuel flow readings (Block 17) corrected for any known fuel flow correction factor.

5. Descent, Land and Taxi - Enter the difference between the totalizer fuel quantity gage readings at the beginning and end of descent or to engine shut down for final descent.

Block 19
FUEL USED EXTRA: Enter extra fuel required, as determined from the flight manual.

Block 20
FUEL USED TOTAL: Enter accumulative total of fuel used.

Block 21
PERIOD: Block 18 plus Block 19.

Block 22
CALC TOTAL: Enter the fuel remaining. Found by subtracting Block 21 from the previous fuel remaining figure.

Block 23
RAMP CALC FUEL: Enter ramp calculated fuel obtained by totaling the fuel quantity gage readings and applying any known correction factor.

Block 24
PERIOD: The increment of fuel used indicated by the difference in the total of the fuel quantity gages for the period.

Block 25
TOTAL: The total of the fuel aboard indicated by the fuel quantity gages.

Block 26
Same as Block 23.

Block 27
FUEL USED: Same as Block 21.

Block 28
GR WT: Not used on C-141.

Block 29
END GR WT: Enter aircraft gross weight at the end of the period. Found by subtracting the fuel used for the period (Block 27) from the gross weight at the end of the previous period.

Block 30
Not used on C-141.

Block 31
Not used on C-141.

Block 32
Enter total ramp weight.

Block 33
REMARKS: Enter any remarks desired pertaining to the flight or instrument readings that are not normal, or that would help in log analysis.

Block 34
WEIGHT AND BALANCE DATA: The operating weight, cargo weights, and CG may be determined from the Form F. The fuel weight will be the same as Block 23.

Reference
MR 55-5 (21 Jul 66)

C-141 WEIGHT AND BALANCE

Section 8

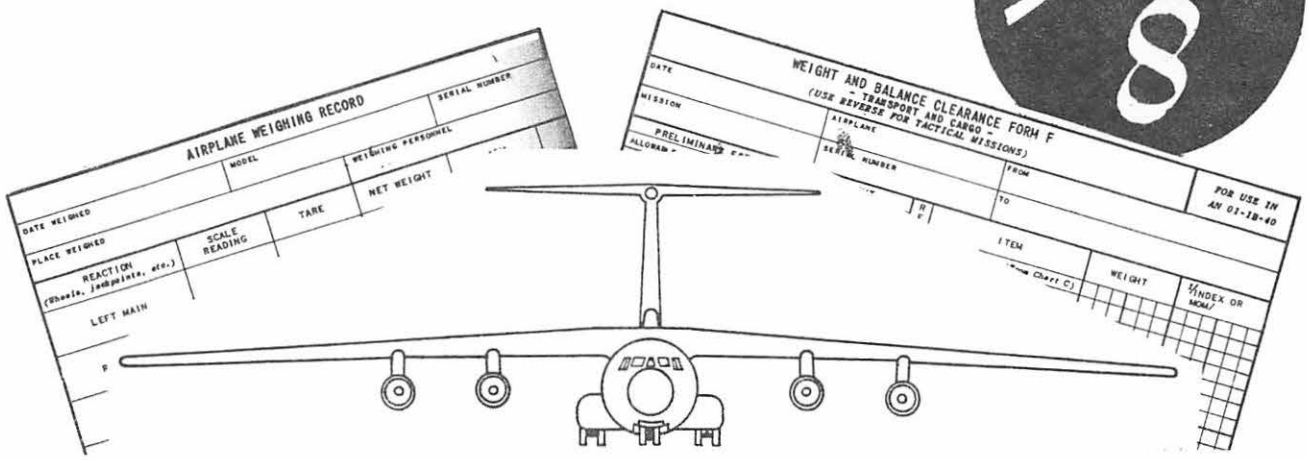

TABLE OF CONTENTS

Chapter 1

BASIC WEIGHT AND BALANCE

Introduction

Many people who are concerned with Weight and Balance computation are capable of operating the load adjuster and completing the Weight and Balance Clearance Form; however, they do not have a clear understanding of the principles or reasons for Weight and Balance

Some Reasons for Weight and Balance

Many valuable aircraft, together with their crews and passengers and/or cargo loads have been needlessly lost because weight and balance has been either neglected or incorrectly computed.

Aircraft have been flown on numerous occasions at excessively high gross weights and at balance (CG) positions exceeding the recommended limits. This results in the following unsatisfactory flight conditions:

Increase in takeoff distance.

Increase in stalling speeds.

Decrease in range.

Decrease in rate of climb.

Decrease in structural safety factors.

A standard system of weight and balance control has been established to aid in the prevention and correction of these situations. With this standard program, weight and balance can be checked for takeoff and landing conditions by calculations, charts, or by use of balance computers.

Weight and Balance Theory Terms

Weight
The force with which a body is attracted toward the earth. This is usually expressed in pounds.

Reference Line
The reference line is an imaginary vertical plane from which all horizontal distances (arms) are measured.

Arm
The distance from a reference line to the balance point of an item being considered. This is expressed in inches.

Moment
An engineering term which is a force or weight multiplied by an arm or inches. This is in inch-pounds and is expressed as a moment.

CG
The center of gravity is a point about which an object will balance, if suspended from that point.

Fulcrum
The support or point on which a lever turns.

Weight and Balance Formulas

In working weight and balance problems, you will need to know the following formulas:

Inch-pounds = Inches x pounds

$$\text{Simplified Moment} = \frac{\text{Whole Moment}}{\text{Constant}}$$

Moment = Weight x Arm

$$\text{Arm} = \frac{\text{Moment}}{\text{Weight}}$$

$$\text{Weight} = \frac{\text{Moment}}{\text{Arm}}$$

If the formula required for the particular part of a problem eludes you, then the weight and balance triangle shown will aid in selecting the formula needed. To use the triangle, cover the unknown factor and the triangle will show the correct formula.

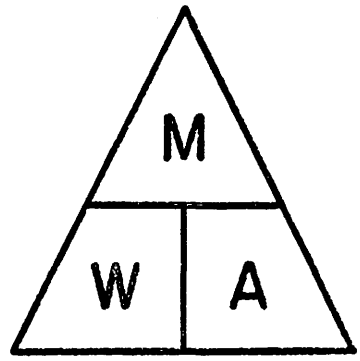

Basic Weight and Balance Theory

The theory of aircraft balance is similar to a teeter totter which is in balance when it rests on a fulcrum in a level position. The influence of weights on the teeter totter is directly dependent on the weight's distance from the fulcrum. To balance, the weights must be distributed, so that the turning effect is the same on one side of the fulcrum as on the other side. A heavy weight near the fulcrum has the same effect as a lighter weight farther out on the teeter totter.

Aircraft Balance Theory

When the weight and moment of the basic aircraft is known, it is not difficult to compute the effect on the aircraft's balance condition of fuel, crew, cargo and other expendable weights as they are added. This is accomplished by adding all item weights to the basic weight and by adding all item moments to the basic moment and then dividing the total moments by the total weight. This establishes the CG of the loaded aircraft in inches from the reference line.

$$CG = \frac{\text{Basic moment + added moments}}{\text{Basic weight + weight of added items}}$$

In the case of a teeter totter or steelyard scale, they are in balance only when the horizontal center of gravity (CG) is at one location - the fulcrum. An aircraft, however, can be balanced in flight with the CG anywhere within the specified forward and aft limits by operation of trim tabs or elevators. Center of gravity locations outside of specified limits will result in unsatisfactory or dangerous flight characteristics.

This allowable variation is called CG range and its exact location is specified for each aircraft model. Obtaining this balance is simply a matter of distributing the load so that the CG of the loaded aircraft is located within the allowable range for the model concerned. Heavy loads near the wing location can be balanced by much lighter loads at the nose or tail of the aircraft. The moments of the load determine this exactly.

NOTE: In all cases when adding weight to an aircraft, moments are also added.

Expressing the CG Location

The position of the CG or balance point may be expressed in inches from the reference datum or in a percentage of the Mean Aerodynamic Chord (percent MAC). For describing CG locations, the use of the unit % MAC is often necessary for engineering purposes.

Aircraft Weight and Balance Terms

The major terms used in expressing the center of gravity location of an aircraft are listed below:

Reference Datum
In connection with the aircraft reference line is known as the Reference Datum. This is an imaginary vertical plane at or near the nose of the aircraft from which all horizontal distances (arms) are measured. Diagrams of each aircraft show the Reference Datum as Station Zero. The Reference Datum is used as a basis for reckoning.

Station
A vertical plane parallel to the Reference Datum, the numerical designation of which usually shows its distance in inches from the Reference Datum.

Compartment
A part into which an inclosed area is divided on an aircraft. It is between two designated stations and is identified with letters of the alphabet, i.e., A, B.

Centroid
The center point of any given area (usually the center of a compartment in connection with aircraft) and when expressed in inches from the Reference Datum, is the arm used for calculating moments for a compartment.

Chord

A straight line from the front to the rear of the wing. If a wing has a flat under-surface, the width of the under-surface is the chord. If the under-surface is curved, a line drawn from the front to the rear of the wing is the chord.

Airfoil Section

An airfoil section is a cross section of a wing from leading to trailing edge.

Mean Aerodynamic Chord (MAC)

The mean aerodynamic chord or average aerodynamic chord is the chord of an imaginary airfoil section which would have force vectors throughout the flight range identical with those of the actual wing or wings.

Forward CG Limits

This limit may vary with the gross weight of the aircraft and is often restricted to control landing conditions. In such cases it may be possible for the aircraft to maintain stable and safe flight with the CG ahead of the forward limit as prescribed by landing conditions, but since landing is the most critical operation in such cases, the forward CG is restricted to preserve the aircraft structure when landing and to insure that sufficient elevator deflection is available to attain minimum airspeed.

Aft CG Limits

The aft CG limit is the most rearward position at which the CG can be located for the most critical permissible maneuver or operation.

CG Range

The forward and aft center of gravity limits expressed in inches or percent of mean aerodynamic chord, i.e., station 904.0 to station 949.2 or 17.0% of MAC to 34.0% of MAC.

Expressing the Center of Gravity

As already stated, the aircraft center of gravity may be expressed in inches from the reference datum or in percent of MAC.

Computing the CG in Inches From Reference Datum

Divide the total moments by the total weights. This calculation will give the center of gravity location in inches from the reference datum.

$$\frac{\text{Total Moment}}{\text{Total Weight}} = \text{CG Station}$$

Computing the CG in % of MAC

To express the CG in percent of mean aerodynamic chord instead of inches from the reference datum, it is necessary to know:

Weight (total weight)

Moment (total moment)

Length of the MAC

Distance from reference datum to leading edge of the MAC.

These known factors are used in the following formula:

$$\frac{\text{Moment}}{\text{Weight}} = \text{CG Station}$$

$$\% \text{ MAC} = \frac{\text{CG Station - Distance to Leading Edge of MAC}}{\text{Length of MAC}}$$

Chapter 2

WEIGHT AND BALANCE PUBLICATIONS AND FORMS

Introduction

The standard system of field weight and balance control requires the use of several publications. In addition, forms are required to keep pertinent weight and balance facts available for pilots.

General Flight Rules AFM 60-16

This regulation prescribes general flight rules which govern the operation of USAF aircraft. The regulation states in part that weight and balance will be computed and filed in accordance with appropriate Dash 1 flight manuals and technical orders or as directed by the commanders concerned.

C-141A Flight Manual T.O. 1C-141A-1

This T.O. covers the C-141 maximum weight limitations and center of gravity limits.

Transport Operations MM 55-1

Appendix "A" to this manual lists the maximum weight limitations and center of gravity limits of Military Airlift Command aircraft.

Basic Weight and Balance Data T.O. 1-1B-50

This T.O. governs and controls the weight and balance of aircraft to prevent accidents due to improper loading. It also supplements the overall weight and balance control program currently in force in the USAF.

Weight and Balance Data T.O. 1-1B-40

This T.O. provides a standard system of field weight and balance control. It contains instructive information and is used as the permanent binder for the forms and charts, which provide continuous control of the weight and balance of the aircraft. The forms and charts found in T.O. 1-1B-40 are:

Record of Weight and Balance Personnel, DD Form 365.

Chart A - Basic Weight Check List, DD Form 365A.

Airplane Weighing Record, DD Form 365B.

Chart C - Basic Weight and Balance Record, DD Form 365C.

Form F - Weight and Balance Clearance Form F, DD Form 365F.

Chart E - Loading Data, Charts and Graphs.

There are two parts to the weight and balance problem. First, one must have correct information as to the basic weight and moment. Second, gross weight and balance must be maintained within weight and CG limits with the addition of load.

The first part is controlled by Charts A and C after the basic weight and balance have been determined by weighing the aircraft. The second part is carried out on the Form F with the aid of a balance computer or Chart E.

Record of Weight and Balance Personnel DD Form 365

Listed at the top of this form are the aircraft model and serial number. The form provides a continuous record of the name and grade (civilian or military) of weight and balance personnel responsible for the handbook records, the station, the date assigned and the date relieved.

Chart A - Basic Weight Check List DD Form 365A

The Basic Weight Check List is a tabulation of all operating equipment that is or may be installed and for which providion or fixed stowage has been made in a definite location in the aircraft. It gives the weight, arm and moment/constant of the individual items for use in correcting the basic weight and moment on Chart C as changes are made in this equipment. When check marks are entered in the IN AIRPLANE column, it serves as the inventory of equipment included in the basic weight and moment/constant.

An aircraft should be weighed and inventories should be made as specified in T.O.s 1-1B-40 and 1-1B-50. Examples of when this weighing may occur are shown below:

The aircraft undergoes modification, major overhaul, or repair.

The pilot reports unsatisfactory flight characteristics (tail or nose heaviness).

When calculated weight and balance data is suspected to be in error.

Airplane Weighing Record DD Form 365B

This form is used as the work sheet by the weight and balance personnel, when the aircraft is being weighed.

Once the necessary computations have been made, the new basic weight and moment/constant will be transferred to the Chart C. All subsequent aircraft loadings will be based on these figures.

Chart C - Basic Weight and Balance Record DD Form 365C

Chart C is a continuous history of the basic weight, moment, and balance computer index resulting from structural and equipment changes in service. At all times the last weight, moment/constant and index entry is considered the current weight and balance status of the basic aircraft. The basic index for the balance computer can be determined by means of the index scale or index formula on the computer.

Chart E - Loading Data

The loading data on Chart E is intended to provide information necessary to work a loading problem for the aircraft to which this handbook is applicable. The balance computer, if furnished, accomplishes the same purpose and requires less computation.

From the loading graphs or tables, weight and moment/constant are obtained for all variable load items and are added arithmetically to the current basic weight and moment/constant (from Chart C) to obtain the gross weight and moment. The CG of the loaded air craft is represented by the intersection of the gross weight and moment figure if tables are used.

If the aircraft is loaded within the forward and aft CG limits, the intersection will fall between the limiting moments.

Weight and Balance Clearance Form F DD Form 365F

General

The Form F is the summary of the actual disposition of load in the aircraft. It records the balance status of the aircraft step by step. It serves as a work sheet for weight and balance calculations and any corrections that must be made, to insure that the aircraft will be within weight and CG limits. It is necessary to accomplish a Form F prior to all flights except certain training flights.

The Form F is furnished in expendable pads, or as separate sheets, which can be replaced when exhausted. An original and carbon are prepared for each loading. The original sheet carrying out the signature of responsibility, can be removed to serve as certificate of proper weight and balance as required by existing clearance directives. The duplicate copy must remain in the handbook for the duration of the flight. On a cross-country flight, the Form F aids the weight and balance technician at refueling bases and stopover stations.

There are two versions of the Form F: TRANSPORT and TACTICAL. They were designed to provide for the respective loading arrangements of these two types of aircraft. General use and fulfillment of either version is the same.

DD Form 365F Definitions

Before you complete a Form F, there are certain terms to consider in the calculation of the balance condition of the aircraft.

Simplified Moment
A moment which has been reduced in number of digits by dividing by a constant.

$$\text{Simplified Moment} = \frac{\text{Moment (inch-pounds)}}{\text{Constant (10,000)}}$$

Basic Weight
This is the weight of an aircraft including all operating equipment that has a fixed location and is actually in the aircraft. These include the airframe, power plants and accessories and trapped fuel and oil. Items commonly referred to as disposable are never included.

Operating Weight
This is the basic weight plus oil, crew, crew baggage, steward's equipment, emergency equipment, and any extra equipment.

Takeoff Fuel Weight
The amount of fuel aboard at the time of takeoff.

Total Airplane and Fuel Weight
This is the operating weight plus takeoff fuel load.

Gross Weight - Takeoff
The total weight of the aircraft plus all of the contents. This is the same as the takeoff condition on the Form F.

Gross Weight - Landing
This is the takeoff weight minus the fuel used and other expendable weights.

Allowable Gross Landing Weight
The maximum gross weight at which the aircraft may land, except during an emergency.

Limiting Wing Fuel Weight
This is that weight above which any additional weight must be fuel in the wings.

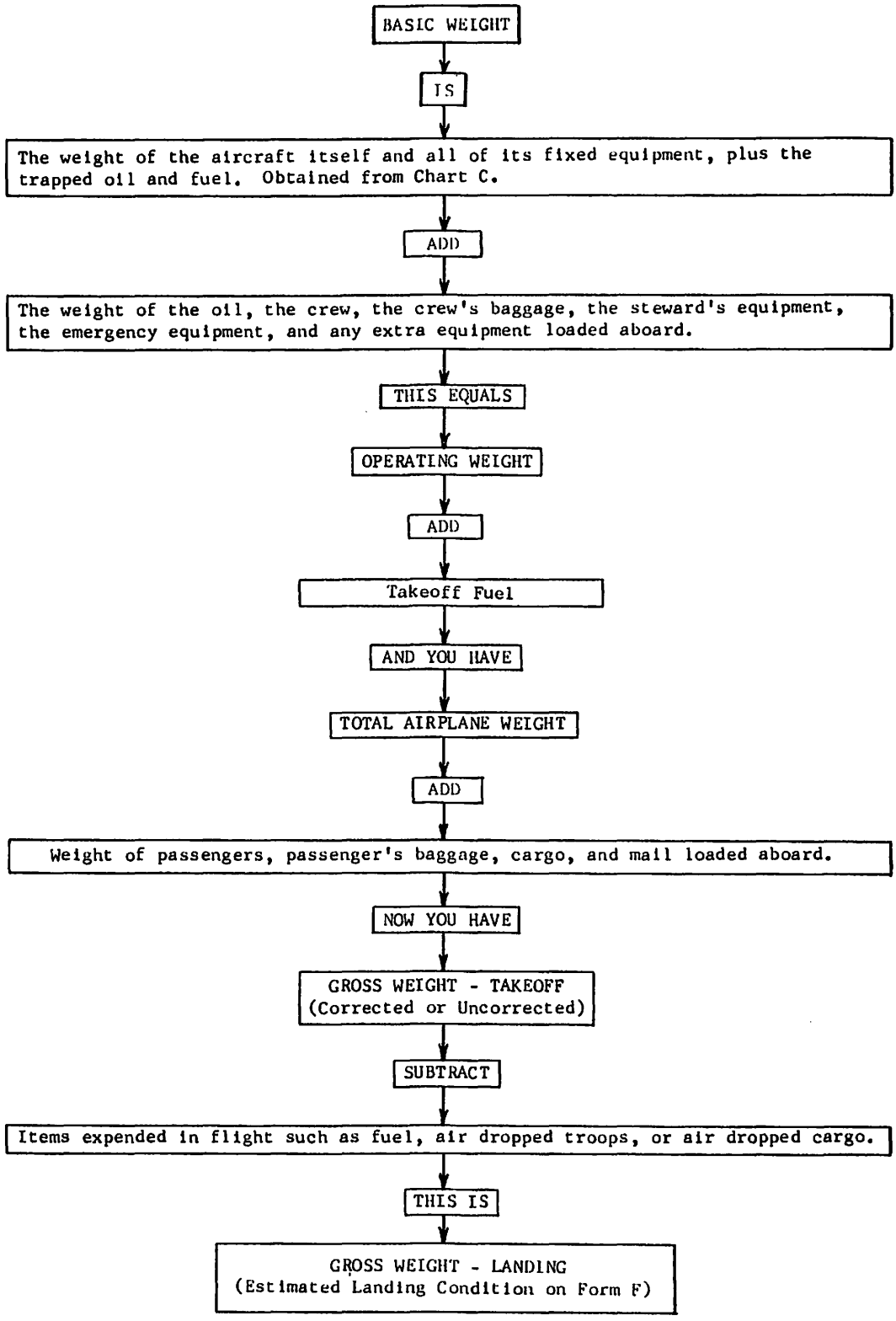

FORM F WEIGHT TERMS

Filling Out the Transport Version of the DD Form 365F

Insert the necessary identifying information at the top of the form. In the blank spaces of the LIMITATIONS table, enter the gross weight and CG restrictions obtained from the latest applicable Technical Orders.

Reference 1
Enter the aircraft basic weight and moment/constant. Obtain these figures from the last entry on Chart C - Basic Weight and Balance Record.

NOTE: If Chart E is used, enter moment/constant values throughout the form.

Reference 2
Enter the amount and weight of oil.

Reference 3
Enter the number and weight of crew. Use actual crew weights if available.

Reference 4
Enter the weight of the crew's baggage.

Reference 5
Enter the weight of the steward's equipment.

Reference 6
Enter the weight of the emergency equipment.

Reference 7
Enter the weight of any extra equipment

Reference 8
Enter the sum of the weights for Reference 1 through Reference 7 inclusive, to obtain OPERATING WEIGHT.

Reference 9
Enter the number of gallons and weight of the takeoff fuel. The weight of fuel used in warmup and taxi should not be included.

NOTE: List under REMARKS the fuel tanks concerned and the amount of fuel in each tank. If external fuel is carried, make appropriate entries to that effect in the space provided.

Reference 11
Enter the sum of the weights for Reference 8 and Reference 9 inclusive, to obtain TOTAL AIRPLANE WEIGHT.

Determine the ALLOWABLE LOAD based on takeoff, landing or limiting wing fuel restrictions by use of the LIMITATIONS table in the upper left hand corner of the form, as follows:

1. Enter the ALLOWABLE GROSS WEIGHTS for TAKEOFF, LANDING, AND LIMITING WING FUEL.

2. Proceed diagonally across the table and fill in the three blank spaces. In the blank space for TOTAL AIRPLANE WEIGHT, enter the weight from Reference 11. In the blank for OPERATING WEIGHT PLUS ESTIMATED LANDING WEIGHT FUEL, enter the operating weight, and the estimated landing fuel weight. In the blank for OPERATING WEIGHT, enter operating weight.

3. Subtract the above weights from the respective allowable gross weights to obtain the respective allowable loads. The smallest of these allowable loads is the ALLOWABLE LOAD, and represents the maximum amount of weight which may be distributed throughout the aircraft in the various compartments without exceeding the limiting gross weights of the aircraft.

WEIGHT AND BALANCE CLEARANCE FORM F

TRANSPORT

(USE REVERSE FOR TACTICAL MISSIONS)

Cross Reference RAF Form 2970 RCAF Form F. 115 C MM 5-51 (07W)

FOR USE IN T. O. 1-1B-40 & AN 01-1B-40

DATE	AIRPLANE TYPE	FROM	HOME STATION
MISSION/TRIP/FLIGHT/NO.	SERIAL NO.	TO	PILOT

LIMITATIONS			
CONDITION	TAKEOFF	LANDING	LIMITING WING FUEL
[1] ALLOWABLE GROSS WEIGHT			
TOTAL AIRPLANE WEIGHT (*Ref. 11*)			
OPERATING WEIGHT PLUS ESTIMATED LANDING FUEL WEIGHT			
OPERATING WEIGHT (*Ref. 8*)			
ALLOWABLE LOAD (*Ref. 18*) (*use SMALLEST figure*)			
[2] PERMISSIBLE C. G. TAKEOFF	FROM	TO (% *M.A.C. or IN.*)	
[4] PERMISSIBLE C. G. LANDING	FROM	TO (% *M.A.C. or IN.*)	
[6] LANDING FUEL WEIGHT			

REF	ITEM	WEIGHT	[1] INDEX OR MOM/
1	BASIC AIRPLANE (*From Chart C*)		
2	OIL (*Gal.*)		
3	CREW (*No.*)		
4	CREW'S BAGGAGE		
5	STEWARD'S EQUIPMENT		
6	EMERGENCY EQUIPMENT		
7	EXTRA EQUIPMENT		
8	OPERATING WEIGHT		
9	TAKEOFF FUEL (*Gal.*)		
10	WATER INJ. FLUID (*Gal.*)		
11	TOTAL AIRPLANE WEIGHT		

REMARKS

TOTAL FREIGHT

TOTAL MAIL

COMPUTER PLATE NUMBER (*If used*)

[1] *Enter constant used.*
[2] *Enter values from current applicable T. O.*
[3] *Applicable to gross weight (Ref. 13).*
[4] *Applicable to gross weight (Ref. 18).*
[5] *Ref. 9 minus Ref. 17.*

12 DISTRIBUTION OF ALLOWABLE LOAD (PAYLOAD)

COMPT	UPPER COMPARTMENTS PASSENGERS NO.	UPPER COMPARTMENTS PASSENGERS WEIGHT	UPPER COMPARTMENTS CARGO	COMPT	LOWER COMPARTMENTS PASSENGERS NO.	LOWER COMPARTMENTS PASSENGERS WEIGHT	LOWER COMPARTMENTS CARGO
A							
B							
C							
D							
E							
F							
G							
H							
I							
J							
K							
L							
M							
N							
O							
P							
FWD BELLY							
AFT BELLY							

CORRECTIONS (*Ref. 14*)			
COMPT	ITEM	CHANGES (+ or −) WEIGHT	[1] INDEX OR MOM/
TOTAL WEIGHT REMOVED		−	−
TOTAL WEIGHT ADDED		+	+
NET DIFFERENCE (*Ref. 14*)			

		WEIGHT
13	TAKEOFF CONDITION (*Uncorrected*)	
14	CORRECTIONS (*If required*)	
15	TAKEOFF CONDITION (*Corrected*)	
16	TAKEOFF C. G. IN % M. A. C. OR IN.	
17	LESS FUEL	
18	LESS AIR SUPPLY LOAD DROPPED	
19	MISC. VARIABLES	
20	ESTIMATED LANDING CONDITION	
21	ESTIMATED LANDING C. G. IN % M. A. C. OR IN.	

COMPUTED BY

SIGNATURE

WEIGHT AND BALANCE AUTHORITY

SIGNATURE

PILOT

SIGNATURE

DD FORM 1 SEPT 54 365F

Reference 12

Using the same compartment letter designation as shown on Chart E (aircraft diagram), enter the number and weight of passengers and the weight of cargo (baggage, mail, etc.). Use actual passenger weights if available. Enter the total for each compartment in the WEIGHT column. If desired for statistical purposes, the TOTAL FREIGHT and the TOTAL MAIL weights may also be listed in the space provided under REMARKS.

NOTE: The sum of the compartment totals must not exceed the ALLOWABLE LOAD determined in the LIMITATIONS table.

Reference 13

Enter the sum of Reference 11 and the compartment totals under Reference 12 opposite TAKEOFF CONDITION (uncorrected). At this point, if not already done, calculate and enter the index or moment/constant for Reference 1 through Reference 13 inclusive.

Check the weight figure, Reference 13, against the GROSS WEIGHT-TAKEOFF in the LIMITATIONS table. Check the moment/constant figure opposite Reference 13 by means of the Chart E, respectively, to ascertain that the indicated CG is within allowable limits.

If changes in amount or distribution of load are required, indicate necessary adjustments by proper entries in the CORRECTIONS table in lower left hand corner of the form. Enter a brief description of the adjustment made in the column marked ITEM.

Add all the weight and moment decreases and insert the totals in the space opposite TOTAL WEIGHT REMOVED.

Add all the weight and moment increases and insert the totals in the space opposite TOTAL WEIGHT ADDED.

Subtract the smaller from the larger of the two totals and enter the difference (with applicable + or - sign) opposite NET DIFFERENCE.

Transfer these NET DIFFERENCE figures to the spaces opposite Reference 14.

Reference 15

Enter the sum of/or the difference between Reference 13 and Reference 14. Recheck to assure that these figures do not exceed allowable limits.

Reference 16

By referring to the CG table on the Chart E, determine the takeoff CG position. Enter this figure in the space opposite TAKEOFF CG.

Reference 17

Estimate the weight of fuel which may be expended before landing. Enter figures together with moment/constant in the spaces provided.

NOTE: Do not consider reserve fuel as expended when determining ESTIMATED LANDING CONDITION.

Reference 18

Enter the weight of AIR SUPPLY LOAD to be dropped before landing moment/constant.

Reference 19

Enter the weight of MISCELLANEOUS items to be expended before landing with index or moment/constant, and enter shift of crew to landing positions, with index or moment/constant change due to crew movement. Explain under REMARKS if necessary.

Reference 20

Enter the differences in weights and index or moment/constant between Reference 15 and the total of References 17, 18 and 19.

Reference 21

By again referring to the CG table on the Chart E, determine the estimated landing CG position. Enter the figure opposite ESTIMATED LANDING CG.

Finally the necessary signatures are affixed in the boxes at the bottom of the form.

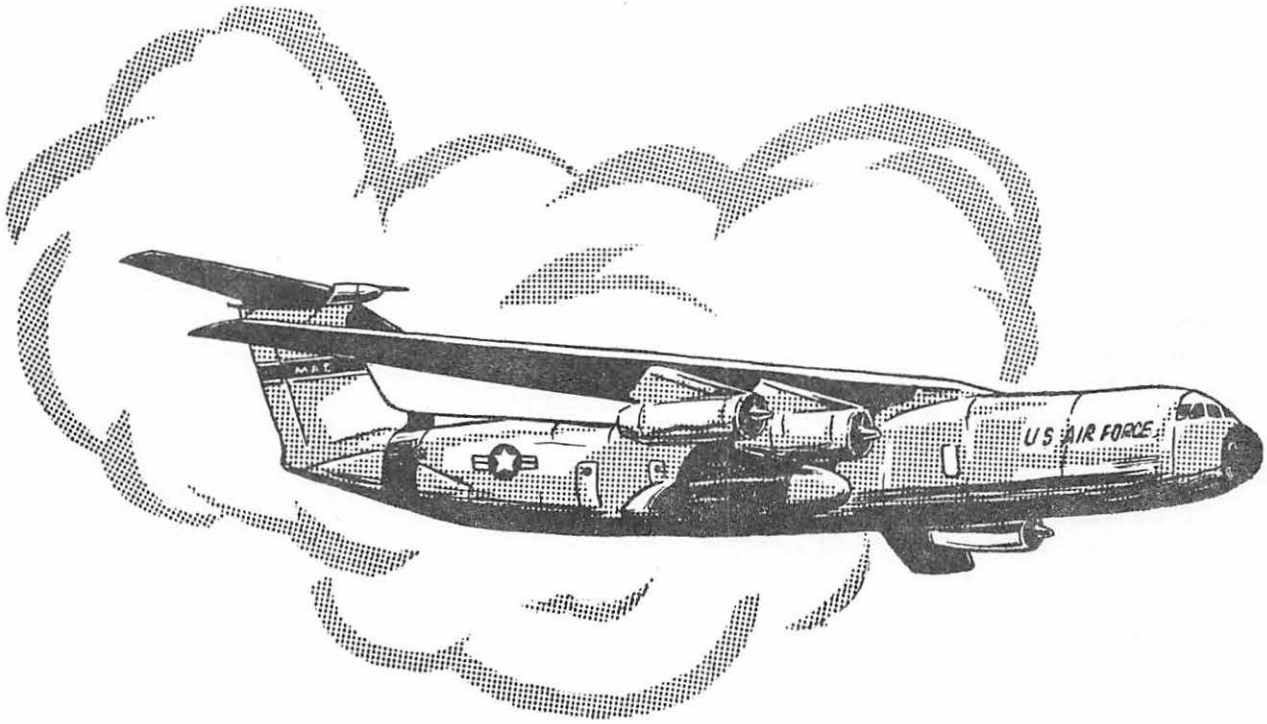

C-141 FLIGHT DIRECTOR

Section 9

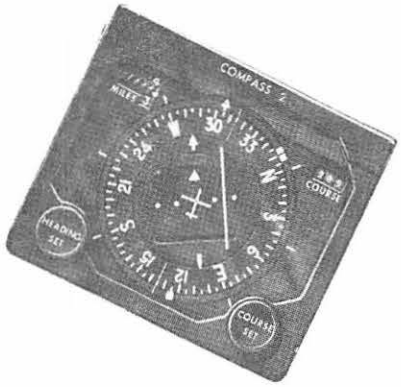

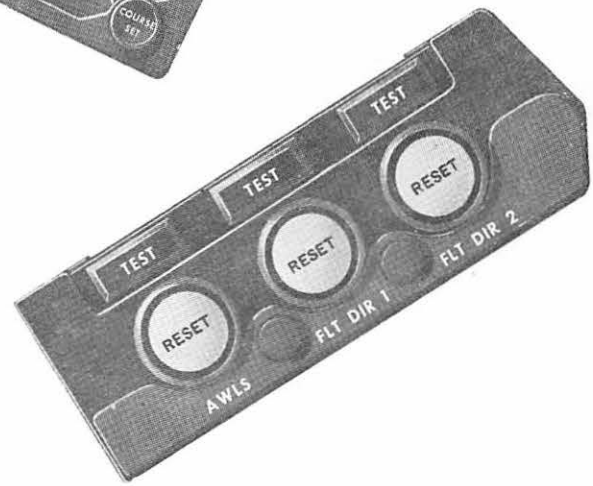

TABLE OF CONTENTS

Chapter 1

FLIGHT DIRECTOR SYSTEM

The C-141 aircraft is equipped with dual flight director systems (FDS). They are designated the pilot's and copilot's, and are completely independent. Each has its own compass and navigational aids inputs. The pilot's FDS receives its signals from the Nr 1 navigational aids. The copilot's FDS receives its signals from the Nr 2 navigational aids.

Attitude information is supplied directly to the ADIs from the respective attitude gyros (Gyro #1 for the pilot's and Gyro #2 for the copilot's). Attitude information for both Flight Director Computers is supplied by the Test Programmer and Logic Computer. This signal is the median signal of the three attitude gyros in the C-141.

Each FDS consists of six major components: Attitude Director Indicator (ADI), Horizontal Situation Indicator (HSI), Flight Director Computer, Roll and Pitch (Attitude) Gyro, Rate Transmitter, and the Navigation Selector Panel.

In addition to the above, there is the RATE OFF warning flag, Switching Rate Gyro, AWLS/Flight Director Test Panel, Fault Identification Panel, and Progress Display Panel. The Flight Director Computers, Attitude Gyros, Rate Transmitters, and Switching Rate Gyros are located in the avionics equipment racks.

The FDS is simply a combining of indicators, i.e., a bringing together or integration of many indicators into two. These two instruments are used to portray the aircraft's horizontal and vertical attitudes. The navigation selector panel is used to select different navigational systems for presentation on the flight director instruments.

ADI

Basically, the Attitude Director Indicator is a roll and pitch indicator. It employs a conventional artificial horizon to indicate the aircraft's attitude, relative to the earth. The roll and pitch gyro, switching rate gyro, and attitude sphere are used to provide this information.

The attitude warning flag comes into view when power is lost to either the attitude gyro or ADI.

A pitch trim knob is on the lower right hand corner of the ADI.

Turn and Bank Indicator

At the bottom of the ADI is a slip and skid (inclinometer) indicator and a 4 minute rate-of-turn indicator. These indicators provide regular needle and ball operation.

On the left side of the ADI is the vertical deviation indicator. The aircraft's position is represented by the center line, which is an extension of the miniature airplane. Vertical deviation is presented as a variable marker. The VDI has a warning flag which will appear if the glide slope signal is lost or unreliable. However, until the VDI is used, both the VDI and warning flag will be biased out of view.

An altitude indicator (rising run-

INTEGRATED FLIGHT INSTRUMENT SYSTEM

FLIGHT DIRECTOR SYSTEM INDICATORS

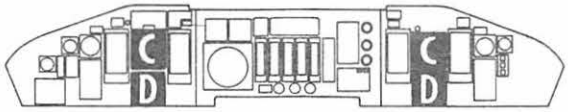

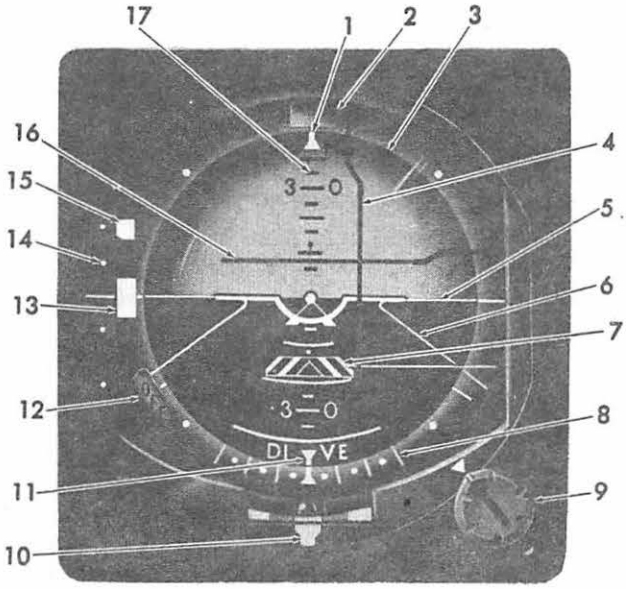

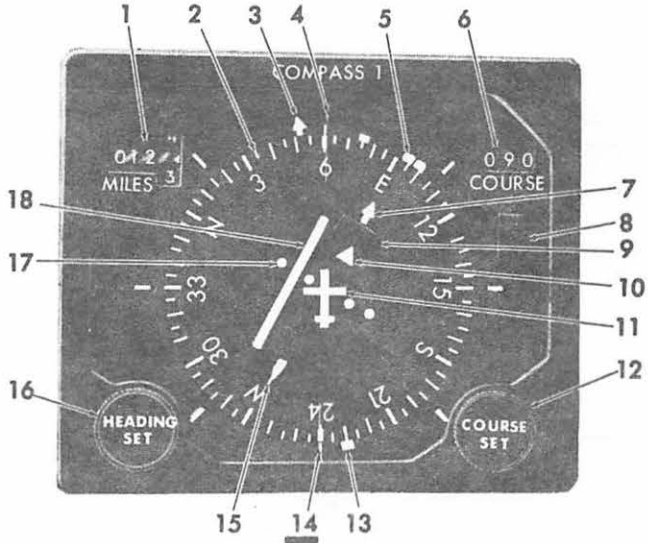

C

ATTITUDE DIRECTOR INDICATOR (ADI)

1. BANK POINTER (HEAD)
2. COURSE WARNING FLAG
3. ATTITUDE SPHERE
4. BANK STEERING BAR
5. HORIZON BAR
6. MINIATURE AIRCRAFT
7. ALTITUDE INDICATOR
8. BANK SCALE
9. PITCH TRIM KNOB
10. TURN AND SLIP INDICATOR
11. BANK POINTER (TAIL)
12. ATTITUDE WARNING FLAG
13. GLIDESLOPE WARNING FLAG
14. VERTICAL DEVIATION SCALE (GLIDESLOPE DEVIATION)
15. VERTICAL DEVIATION INDICATOR (GLIDESLOPE INDICATOR)
16. PITCH STEERING BAR
17. PITCH REFERENCE SCALE

D

HORIZONTAL SITUATION INDICATOR

1. RANGE INDICATOR AND WARNING FLAG
2. COMPASS CARD
3. BEARING POINTER (HEAD)
4. UPPER LUBBER LINE (HEAD)
5. HEADING MARKER
6. COURSE SELECTOR WINDOW
7. COURSE ARROW (HEAD)
8. POWER OFF WARNING FLAG
9. COURSE WARNING FLAG
10. TO-FROM INDICATOR
11. AIRCRAFT SYMBOL
12. COURSE SET KNOB
13. BEARING POINTER (TAIL)
14. LOWER LUBBER LINE (TAIL)
15. COURSE ARROW (TAIL)
16. HEADING SET KNOB
17. COURSE DEVIATION SCALE
18. COURSE DEVIATION INDICATOR

way) moves up into view during approaches, to indicate absolute altitude whenever the radar altimeter is turned ON. At touchdown the altitude indicator should be touching the wheels of the miniature aircraft.

The ADI has two other items of importance; the bank and pitch steering bars. These are used to reflect computed bank and pitch steering commands and will be discussed in a later paragraph. Therefore, the ADI is primarily an artificial horizon with the addition of a turn and slip indicator and the GSI portion of the ID-249.

HSI

The Horizontal Situation Indicator is primarily a master repeater for the compass system and an ID-249, except for the GSI. Also incorporated into the HSI is a range (DME) indicator and radio magnetic bearing pointer (RMI needle).

Aircraft heading (magnetic or directional gyro) is read under the upper lubber line. The aircraft symbol is affixed to the face of the indicator, with the upper and lower lubber lines representing an extension of the aircraft's nose and tail. The compass card rotates around the aircraft symbol and lubber lines as aircraft heading changes.

The heading set knob is used to manually select different heading references as indicated by the position of the heading marker, relative to the compass card. Once set, the heading marker will rotate with the compass card as aircraft heading changes.

The bearing pointer is basically a RMI (Radio Magnetic Indicator) needle. However, in two cases it does not indicate the magnetic bearing to the station. This will be covered with the different modes of operation.

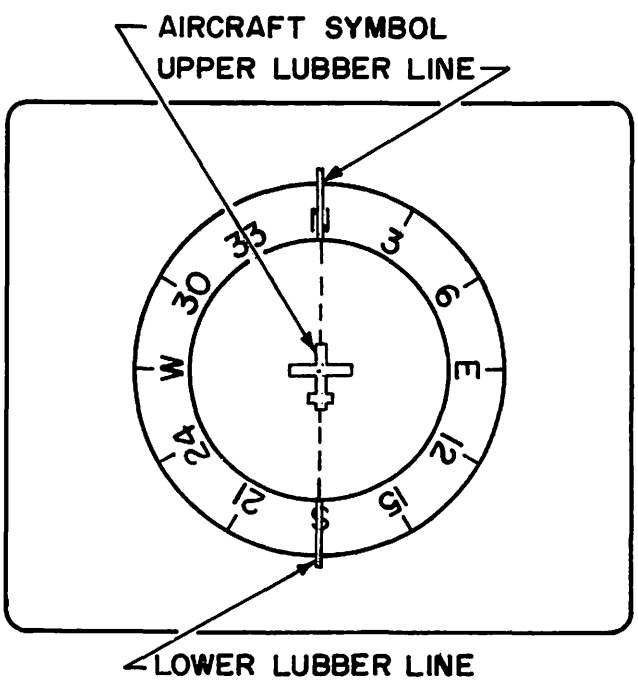

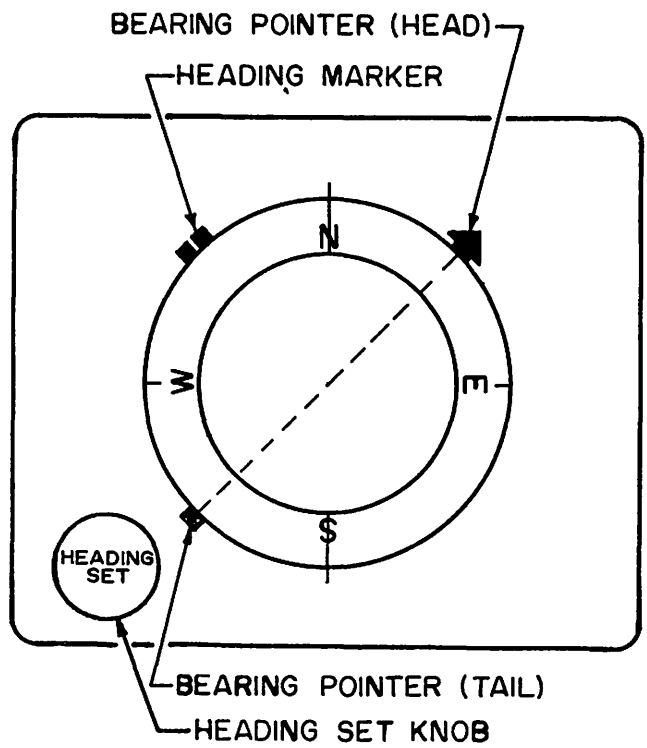

The center portion of the HSI (except for the aircraft symbol) is the course deviation section.

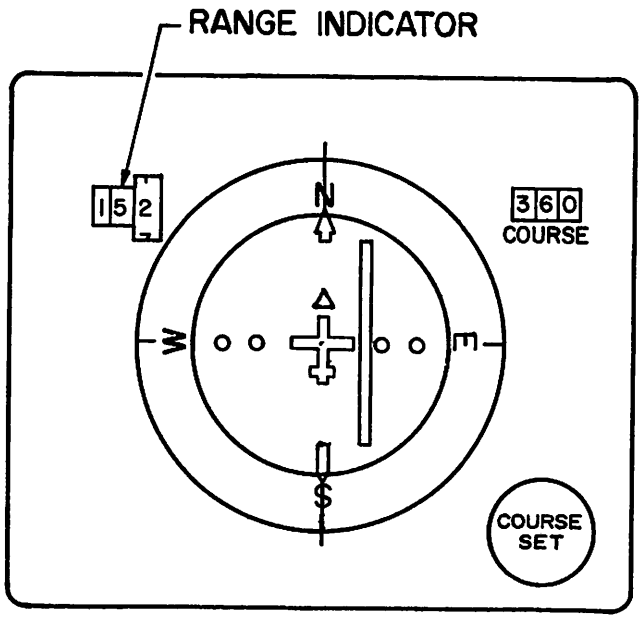

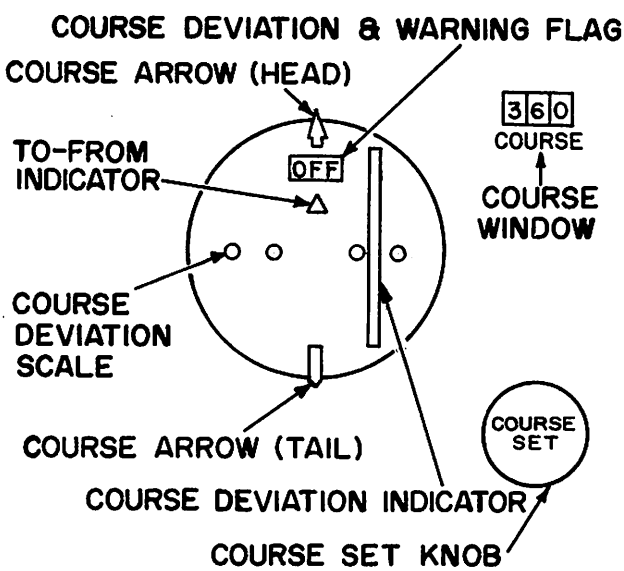

The course deviation indicator (CDI) reflects the actual deviation from the desired course (track or radial), as selected in the course window and indicated by the head of the course arrow. Like the ID-249, the TO-FROM indicator solves ambiguity, i.e., if the course selected is toward or away from the station. When the diamond points toward the course arrow head, the course is TO; when it points toward the course arrow tail, it is FROM the station. The desired course is selected by rotating the course set knob. Any one of 360 different courses can be selected. The complete CDI section will rotate when selecting a new course or changing aircraft heading. The course warning flag will be out-of-view when signals are reliable.

The range indicator (DME) provides a miniaturized, digital readout of the distance to the selected station, if the mode selected affords the capability. The range indicator's maximum reading is 999 nautical miles.

Navigation Selector Panel

The navigation selector panel allows the pilot to select the navigational system, and mode, to be displayed on by the FDS.

These panels are restrictive in selection. The pilot may select only the Nr 1 NAV-AIDS, while the copilot may select only the Nr 2 NAV-AIDS.

The NAV SEL panel includes 6 push-buttons and 2 toggle switches. All of the push-buttons are mechanically interlocked, except the ADI REP. Therefore, only one of these 5 buttons can be depressed at a time.

The 5 push-buttons, marked NAV CMPTR, DOP CMPTR, TAC, VOR/ILS, and NAV-OFF are the navigational mode

NAVIGATION SELECTOR PANELS

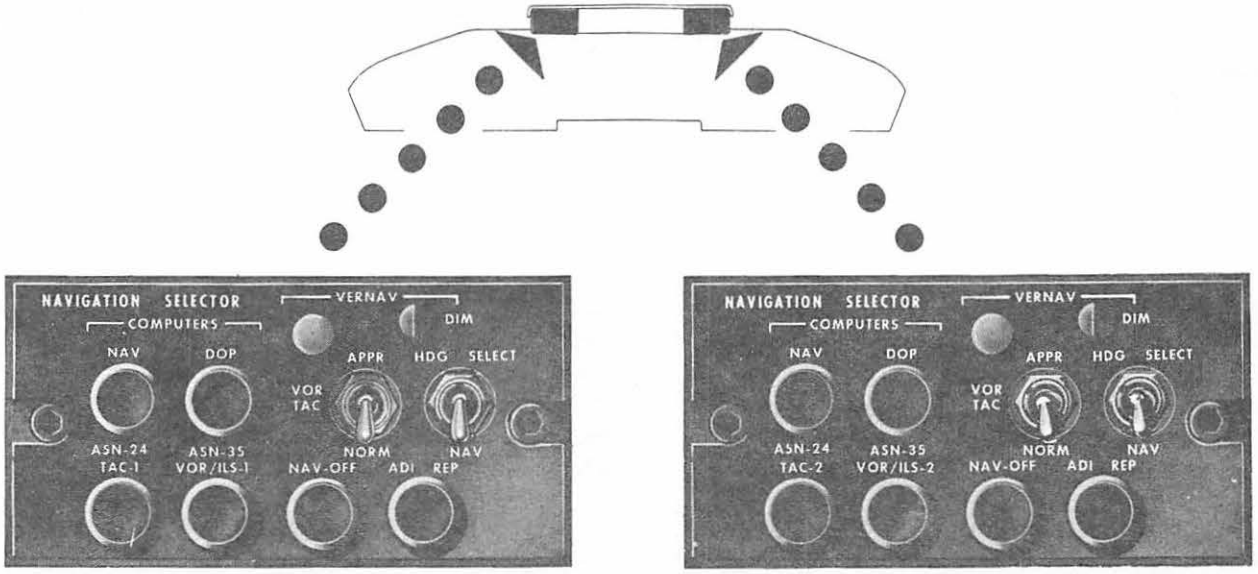

UNDERDECK ELECTRONIC EQUIPMENT

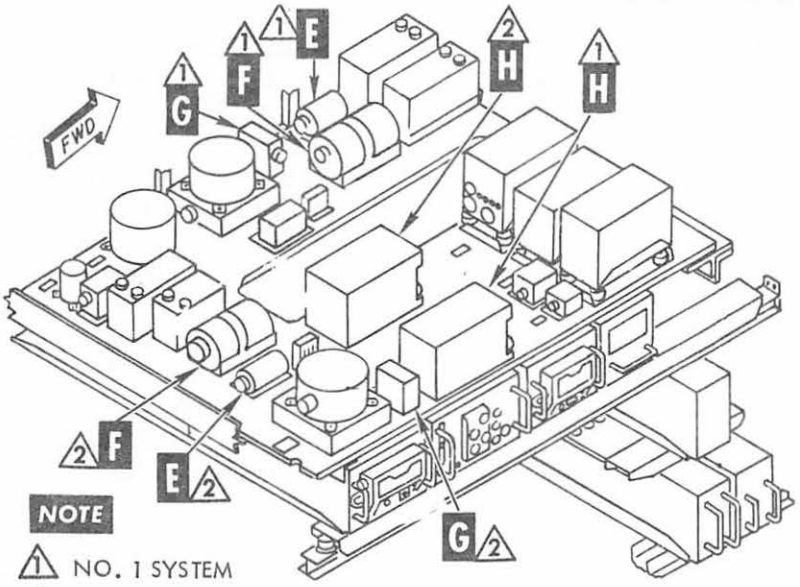

NOTE

1 NO. 1 SYSTEM

2 NO. 2 SYSTEM

CENTER
AVIONICS EQUIPMENT RACK

E RATE GYROSCOPE TRANSMITTER

F ROLL AND PITCH DISPLACEMENT GYROSCOPE

G SWITCHING RATE GYROSCOPE

H FLIGHT DIRECTOR COMPUTER

selectors for ADI and HSI FD display. These will be discussed at length later.

The ADI REP Function

The ADI REP function is a feature whereby one pilot can display the same steering and glideslope information on his ADI that is displayed on the other pilot's ADI. Whenever the ADI REP button is depressed, the associated ADI will repeat the same bank and pitch steering commands, course warning and glideslope warning flags, and glideslope deviation information that is being presented on the other FDS ADI.

It must be emphasized that attitude, attitude warning, and turn and bank information will not be repeated.

Although not necessarily recommended, the ADI REP function could be used when the glideslope receiver or flight director computer fails; or when making a non-standard ILS approach.

NOTE: Caution should be exercised in making ILS approaches using the ADI REP function since HSI display is NOT repeated.

VOR-TAC APPR/NORM Switch

The VOR-TAC APPR/NORM switch allows desensitization of the Flight Director Computer for improved bank steering operation when within 20 NM of a VOR or TAC station.

However, due to this desensitization, the computer is unable to furnish course capture (intercept) while in the mode.

For course captures, the APPR/NORM switch must be in the NORM position.

HDG SELECT/NAV Switch

Anytime the HDG SELECT/NAV switch is positioned to HDG SELECT, the FDS will disregard the NAV signals and use the heading marker's setting to compute the bank angle necessary for the new heading. That is, in the HDG SELECT mode of operation, the bank steering bar will present steering commands to turn to whatever heading is selected under the heading marker.

A practical use of this feature can be seen during a missed approach situation. With the FDS in the ILS APPROACH mode (with the missed approach heading selected under the heading marker) the pilot could execute a go-around, by moving the HDG SELECT/NAV switch to HDG SELECT and using the bank steering bar. He could perform a simple and easy roll-out on the missed approach heading.

This feature could also be advantageous in a holding pattern to select and hold outbound headings using the HDG SELECT mode and returning to NAV inbound.

The HDG SELECT position will have no effect on the presentation of the HSI. It merely changes the reference used by the FDS Computer to compute bank steering signals from the desired course to a desired heading. Maximum bank, as commanded by the FDS in HDG SELECT, is 23 degrees.

When the HDG SELECT/NAV switch is in NAV, the FDS is now armed for capture of the selected NAV-AID. When the aircraft is within the necessary capture zone, the FDS will command intercept and tracking of the desired course or track.

Maximum bank, as commanded the FDS in NAV, is 30° in all modes except ILS. At glideslope capture,

the bank command is further reduced to 15°.

VERNAV INDICATOR

The VERNAV indicator light is informative only. It will illuminate whenever the navigator has the Vertical Navigation Computer programmed and in operation.

At the proper time, VERNAV deviation and Vertical Command steering will be automatically displayed on both ADI's. The DIM control affects only the intensity of the VERNAV light.

NAV-OFF/NAV Mode

HSI

The only usable information displayed on the HSI while operating in this mode will be aircraft heading. Aircraft heading will be displayed under the upper lubber line and also as a digital "readout" in the course window. (This is the result of the course arrow head being slaved to the upper lubber line.) The bearing pointer will be slaved to the lower lubber line, the CDI will be centered and the warning flag in view, the TO-FROM will be out-of-view, the distance indicator will be masked, and the heading marker will remain at whatever position it was set, i.e., it will rotate with the compass card until it is manually changed.

ADI

The ADI will be in the basic navigation mode and afford only basic flight indications. The attitude sphere (artificial horizon) and turn and slip (needle and ball) are the only active indications. The VDI, GSI warning flag, bank and pitch steering bars, and course warning flag will all be biased out-of-view. Inasmuch as the VDI and bank steering bar are inactive and pulled out-of-view in this mode, their associated warning flags are also pulled out-of-view.

VOR-NAV Mode

HSI

With the VOR/ILS-1 button depressed and a VOR station tuned in on the VHF-NAV receiver, VOR signals will be available for use by the HSI. By selecting the desired course (either inbound or outbound) in the course window, conventional ID-249 information will be available to the pilot. Aircraft heading will be presented under the upper lubber line. Course deviation (left or right) will be reflected by the CDI. In this mode, each dot of deviation represents 5° off course. TO-FROM information will be determined and presented by the position of the TO-FROM indicator. Signal reliability is ascertained from the course deviation and warning flag. Magnetic bearing to the station is read directly from the compass card, under the bearing pointer's head. The reciprocal is read at the bearing pointer's tail. The range indicator is inactive and it will be masked.

ADI

In addition to basic flight indications, computed bank information to the selected course (radial) will be reflected on the bank steering bar when within slightly less than one dot of CDI. The bank steering bar is directional (fly-to-indication) during normal intercepts and will be centered if one of two conditions exist: the aircraft is on course, or the aircraft has been banked sufficiently for an asymptotic approach to the desired course. Bank angle signals, along with course error and course deviation signals are sent to the FDS

where the necessary bank angle is resolved and the necessary amount of bank angle is deflected on the bank steering bar. The maximum bank, as commanded from the computer for all NAV modes will be 30°.

Bank steering bar reliability can be ascertained by the course warning flag. When the flag is in view, it indicates either lost or unreliable course or steering information. Failure of the FDS Computer will affect only the bank steering bar, as it does not have inputs to the HSI. In the above condition, the bank steering bar will also be retracted from view as an added precaution.

ILS-NAV Mode

HSI

When a localizer frequency is selected on the VHF-NAV control, the VOR/ILS-1 button depressed, and sufficient localizer signals received, the system is in the ILS-NAV mode. The FDS will present similar information as the ID-249. Select the approach heading in the course window. The CDI will display the relative position of the center line. Each dot of deviation in the ILS mode represents 1.25° off the center line, i.e., 2.5° for total deflection, left or right. The TO-FROM indicator will be out-of-view, inasmuch as solving for ambiguity is not a function of the localizer system. The bearing pointer will freeze at its last position. The range indicator will be masked.

As long as the front course approach heading is selected in the course window, the CDI will ALWAYS be directional.

ADI

All of the features discussed with VOR-NAV operations will be active on the ADI (attitude sphere, turn and bank, and bank steering bar). The bank steering bar will command intercept and tracking of the localizer when the aircraft is within slightly less than 2 dots of CDI. As the aircraft intercepts the glide slope, the VDI will appear from the top of the scale and move downward as the aircraft approaches the center of the glide slope. Each dot of deviation represents 1/4°. Whenever the aircraft is within 1/4 of a dot from the glide slope centerline, the pitch steering bar will be deflected into view close to the center of the ADI. The FDS Computer is now in the ILS-APPROACH mode, and closer lateral guidance is offered. In this mode, the maximum bank angle the bank steering bar will command is 15°. As long as the aircraft stays within two dots of deviation, either CDI or GSI, the FDS will remain in the ILS-APPROACH mode.

Desensitization of both LOC and G/S is initiated at G/S capture. This desensitization is a linear function of time, lasting for 120 seconds. The LOC (Bank Channel) is desensitized to 45% and the G/S (Pitch channel) is desensitized to approximately 18%.

NOTE: Steering information cannot be used for flying inbound on the back course or outbound on the front course of a localizer (BLUE LEFT course).

TAC-NAV Mode

HSI and ADI

Whenever the TAC-1 button is depressed on the navigation selector panel, TACAN signals will be available for use by the flight director. All of the features discussed under VOR-

NAV mode will be active and usable in the TAC-NAV mode, i.e., CDI, TO-FROM, bearing pointer, bank steering bar, attitude sphere, turn and slip. In addition, the range indicator should display the slant range to the TACAN ground station.

Doppler-NAV Mode

The AN/ASN-35 Doppler Course Computer provides computed distance-to-go on a preset course and left/right deviation from this course. Deviation is called distance cross track (cross track deviation) and is used by the autopilot and flight director in a manner similar to VOR and TACAN. The computer also provides track-angle-error (which is the angular deviation from the desired track) for use in the FDS.

HSI

Selection of either the ASN-24 or ASN-35 Computer will display somewhat different indications than VOR or TACAN on the HSI. The CDI will reflect miles off desired track instead of degrees. Each dot of deviation is 1.5 NM. TO-FROM will be out-of-view.

The course must be manually selected as in VOR or TACAN. (This information will be resolved by the navigator.)

The bearing pointer will indicate TRACK ANGLE ERROR (TAE). The bearing pointer will be a "fly-to" indication, i.e., when the actual track is 10° right of desired track, the pointer will be deflected 10° to the left. It should be realized that the aircraft may be off track by X number of miles, but still making good the desired track heading. When there is no deviation deflected on the CDI and the TAE is zero, the aircraft is on course. Wind drift can be read as the difference between the course arrow (head) and the upper lubber line.

The range indicator will be active and the maximum segment distance-to-go is 999 NM. But, when operating in the ASN-24 mode, the actual readout on the distance indicator will be the last three digits of the distance-to-go, e.g., if actual distance was 4673 miles, the range indicator would read 673.

ADI

The ADI indications will remain the same as VOR-NAV with the understanding that bank steering information will be computed to the desired ASN-24 or ASN-35 course, as selected in the course window. The VDI, glide slope warning flag, and pitch steering bar will all be biased out-of-view.

FDS Malfunctions

Malfunctions affecting the valid operation of the pilots and copilots attitude gyros, the ADI attitude spheres, and the command steering bars are indicated by the illumination of caution lights on the progress display panels and by one or more lights on the fault identification panel.

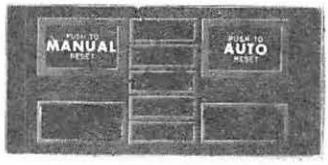

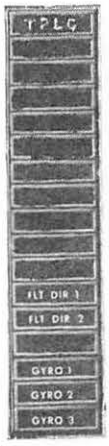

Attitude Gyro Malfunctions

As previously mentioned, the pilot's and copilot's attitude gyros furnish pitch and roll displacement signals directly to the ADI's.

These displacement signals are also furnished to the TPLC; where these signals are compared. The median signed is then selected and sent to both FDS computers and the AFCS.

The TPLC also monitors the ADI sphere relationship to the individual gyro.

NOTE: For this discussion, the pilot's system will be used. Refer to Fault and Caution panels for indications.

1. Problem

Pilot's gyro exceeds 5° of deviation, either pitch or roll.

Display

The AUTO CAUTION, GYRO 1 and TPLC fault lights will illuminate.

2. Problem

Pilot's ADI sphere fails to drive within 5°, pitch or roll, of the gyro displacement signals.

Display

The AUTO CAUTION and GYRO 1 fault lights will illuminate.

If the above deviations were caused by a low voltage condition affecting the GYRO or ADI Amplifier, the ATTITUDE WARNING flag would also be displayed.

FDS Malfunctions

Any malfunction of the Flight Director Computer should be indicated by the illumination of the appropriate FLT DIR fault light and the MAN caution light. If the malfunction affects the bank channel, the ADI Course Warning Flag will also be in view.

FDS Self Test

The final AWLS FDSs have the capability of self-test.

The test is simple and short, taking a maximum of 6.5 seconds to complete.

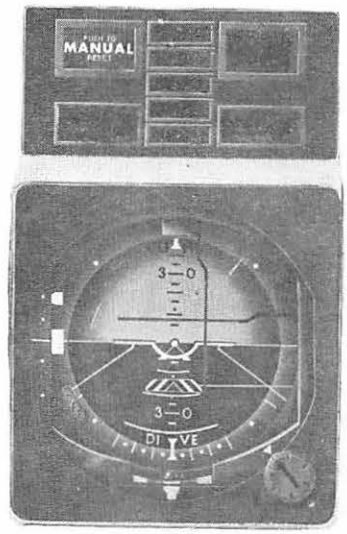

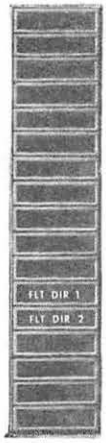

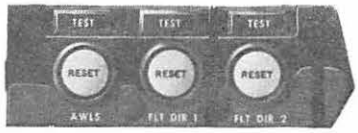

The FDS self-test sequence is as follows:

1. Depress the appropriate FD test button.

2. The TEST light illuminates.

3. Pitch and Bank steering bars and VDI move into view and offset.

4. Within 4.5 seconds the steering bars and VDI should center.

5. The self-test is completed within 6.5 seconds.

6. If the test is completed satisfactorily; the TEST light extinguishes and the RESET light will illuminate.

7. If a fault is detected:

The pitch and bank steering bars and VDI retract, the TEST light extinguishes, and the RESET light DOES NOT illuminate. In addition, the MAN caution light and appropriate FLT DIR fault light will illuminate.

8. After completion of the test, whether a fault was detected or not, the test button must be depressed in order to take the FD out of the test mode.

NOTE: Do not test the FDS immediately prior to initiating an ILS approach as instability is caused within the system. A minimum of 2 minutes is required for the system to stabilize.

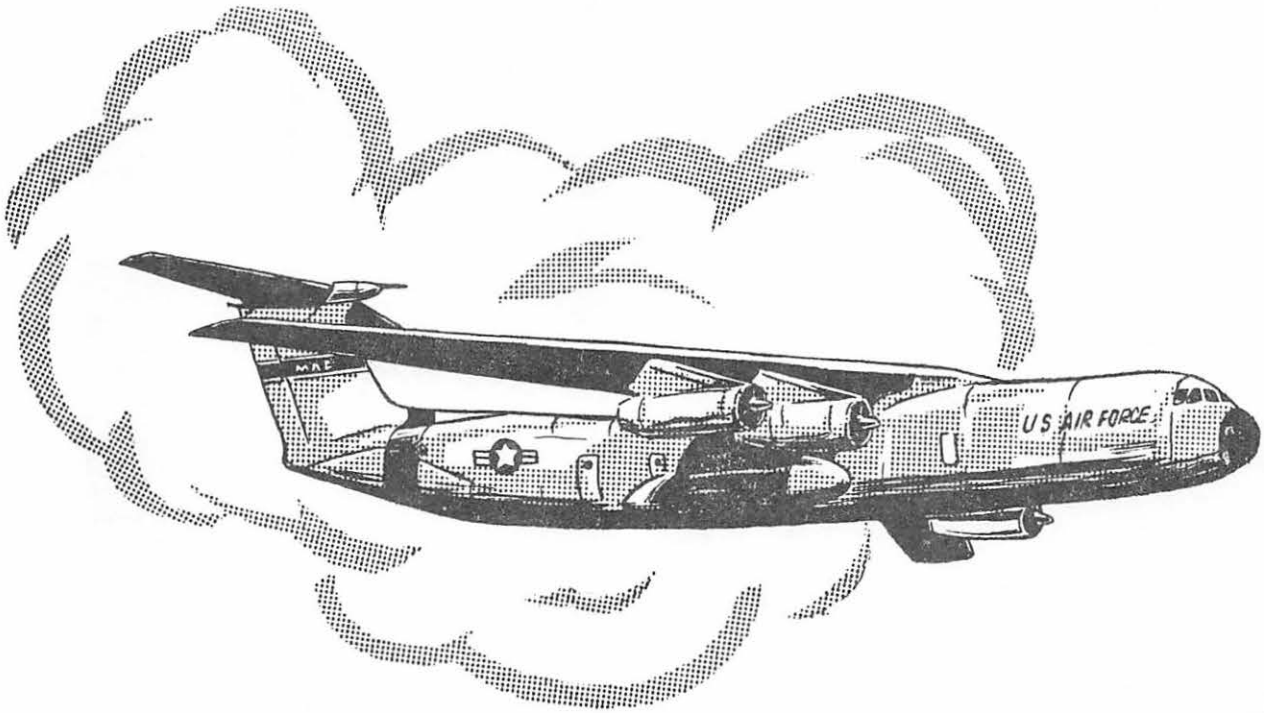

GLOSSARY

NOTE: Both in the study guide and in the classroom, you will find that the names of equipment and procedures have been abbreviated. To help you decipher these abbreviations is the purpose of this GLOSSARY.

Abbreviation	Definition
PHE	Primary Heat Exchanger
SHE	Secondary Heat Exchanger
CADC	Central Air Data Computer
APU	Auxiliary Power Unit
GLC	Generator Line Contactor
BTC	Bus Tie Contactor
CSD	Constant Speed Drive
TR	Transformer Rectifier
TDR #1	Time Delay Relay #1
TDR #2	Time Delay Relay #2
VSFI	Vertical Scale Flight Instrument
VSEI	Vertical Scale Engine Instrument
AWLS	Adverse Weather Landing System
AFCS	Automatic Flight Control System
ATS	Automatic Throttle System
BDHI	Bearing-Distance-Heading Indicator
HSI	Horizontal Situation Indicator
EPR	Engine Pressure Ratio
CWS	Control Wheel Steering
EGT	Exhaust Gas Temperature
TRT	Takeoff Rated Thrust
MRT	Military Rated Thrust
NRT	Normal Rated Thrust
RPM	Revolutions Per Minute
N_1	Forward Compressor
N_2	Aft Compressor
PRBC	Pressure Ratio Bleed Control
CDR	Case Drain Return
ADS	Aerial Delivery System
RTO	Rejected Takeoff
FDS	Flight Director System
TPLC	Test Programmer Logic Computer
MDA	Minimum Decision Altitude
RGA	Rotation Go-Around
BITE	Built In Test Equipment
VER-NAV	Vertical Navigation System
RVR	Runway Visual Range
ADI	Attitude Director Indicator
AGL	Above Ground Level

Abbreviation	Definition
CG	Center of Gravity
CFL	Critical Field Length (Feet)
CL TO	Climb To
COF	Climbout Factor
FL	Flight Level
g	Acceleration Due to Gravity
GW	Gross Weight
Hg	Mercury
ICAO	International Civil Aviation Organization
IOAT	Total Temperature - Outside Air Temperature Plus Temperature Rise Caused by Ram Effect.
K	Constant
L/D	Lift Over Drag Ratio
MAC	Mean Aerodynamics Chord
NM	Nautical Miles
OAT	Outside Air Temperature
PA	Pressure Altitude
RA	Runway Available (Feet)
R/C	Rate of Climb (Feet per Minute)
RCR	Runway Condition Reading
RL	Runway Length
RSC	Runway Surface Covering
SL	Sea Level Altitude
CAS	Calibrated Airspeed
EAS	Equivalent Airspeed
IAS	Indicated Airspeed
TAS	True Airspeed
M	Mach Number
TD	Touchdown
TF	Thrust Factor
TEMP DEV	Temperature Deviation from Standard Day
TOF	Takeoff Factor
V_B(MAX)	Maximum Braking Speed
V_{CEF}	Critical Engine Failure Speed
V_{GO}	GO Speed
VHR	Restricted Level Flight Speed
V_L	Dive Speed Limit
V_{MCA}	Air Minimum Control Speed
V_{MCG}	Ground Minimum Control Speed
V_{MCO}	Minimum Climbout Speed
V_{MFR}	Minimum Flap Retract Speed
V_R	Refusal Speed
V_{ROT}	Rotation Speed
V_S	Stall Speed
V_{SHO}	Shaker Onset Speed